“PicoBK™” MYRGC075060W31RB / MYRGC075060B31RB

0.6A Inductor Built-in Step-Down “mini DC-DC” Converters

■GENERAL DESCRIPTION

The MYRGC075060W31RB / MYRGC075060B31RB is a small (3.0mm×3.0mm, h=1.7mm) 36V, 600mA step-down DC-DC converter with an integrated control IC and coil. Integrating the coil makes for easier circuit board layout and minimizes malfunction and noise from the component and wiring layout.

The input voltage range is 3.0V to 36.0V, and the switching frequency is 1.2MHz, making it possible to supply a stable voltage with high efficiency. The output voltage can be changed from 2.8V to 6.0V using an external resistor, so the same part number can be used for multiple power lines.

By connecting a resistor and capacitance to the EN/SS terminal, it is possible to externally adjust the soft start time longer than the internal soft start.

The power good function also monitors the output voltage status. This soft start external adjustment function and power good function make it easy to configure the power supply sequence.

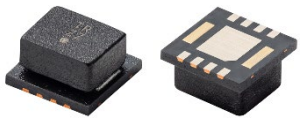

The built-in current limiter and thermal shutdown functions as protection functions make it safe to use.

■APPLICATIONS

- Industrial automation
- Industrial sensors
- Security systems
- Home appliances
- 4~20mA current loop
- High-voltage LDO replacement
- General-purpose power supply /General-purpose POL

■FEATURES

Input Voltage Range	:	3.0V ~ 36.0V (Absolute Max 40.0V)
Peak voltage	:	46.0V (Applied Time≦400ms)
Output Voltage Range	:	2.8V ~ 6.0V
FB Voltage	:	0.75V ± 1.5%
Output Current	:	600mA
Oscillation Frequency	:	1.2MHz
Quiescent Current	:	11μA (MYRGC075060B31RB)
Efficiency	:	88% (V_{IN} = 12V, V_{OUT} = 5V, I_{OUT} = 300mA)
Control Methods	:	F-PWM Control (MYRGC075060W31RB)
		PWM/PFM Control (MYRGC075060B31RB)
Protection functions	:	Current Limit
		Thermal Shutdown
Functions	:	Soft start (external adjustment)
		Power Good
Output Capacitor	:	Ceramic Capacitor
Operating Ambient Temperature	:	-40℃ ~ 105℃
Size(L x W x H)	:	3.0 x 3.0 x 1.7mm
Environmentally Friendly	:	EU RoHS Compliant, Pb Free, Halogen Free

■TYPICAL APPLICATION CIRCUIT

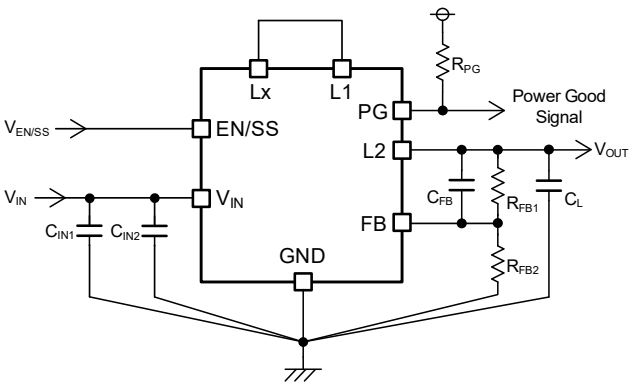

■ TYPICAL PERFORMANCE CHARACTERISTICS

V_{IN}=12V, V_{OUT}=5.0V

C_{IN1}=4.7μF (GRM21BC71H475KE11),

C_{IN2}=0.1μF (GRM188R71H104KA93)

C_L=47μF x 2 (GRM21BR61A476ME15)

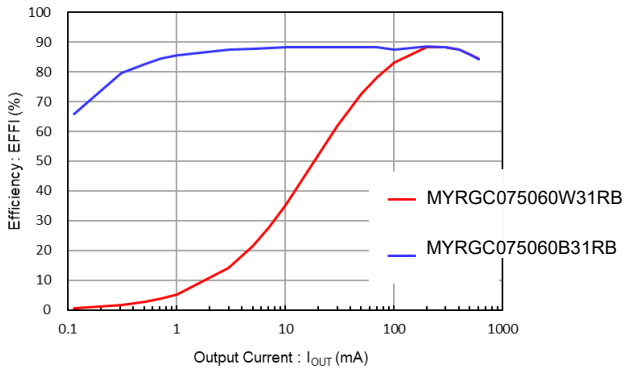

Copyright ©2026 Murata Manufacturing Co., Ltd. All rights reserved.
Specifications are subject to change without notice.

■BLOCK DIAGRAM

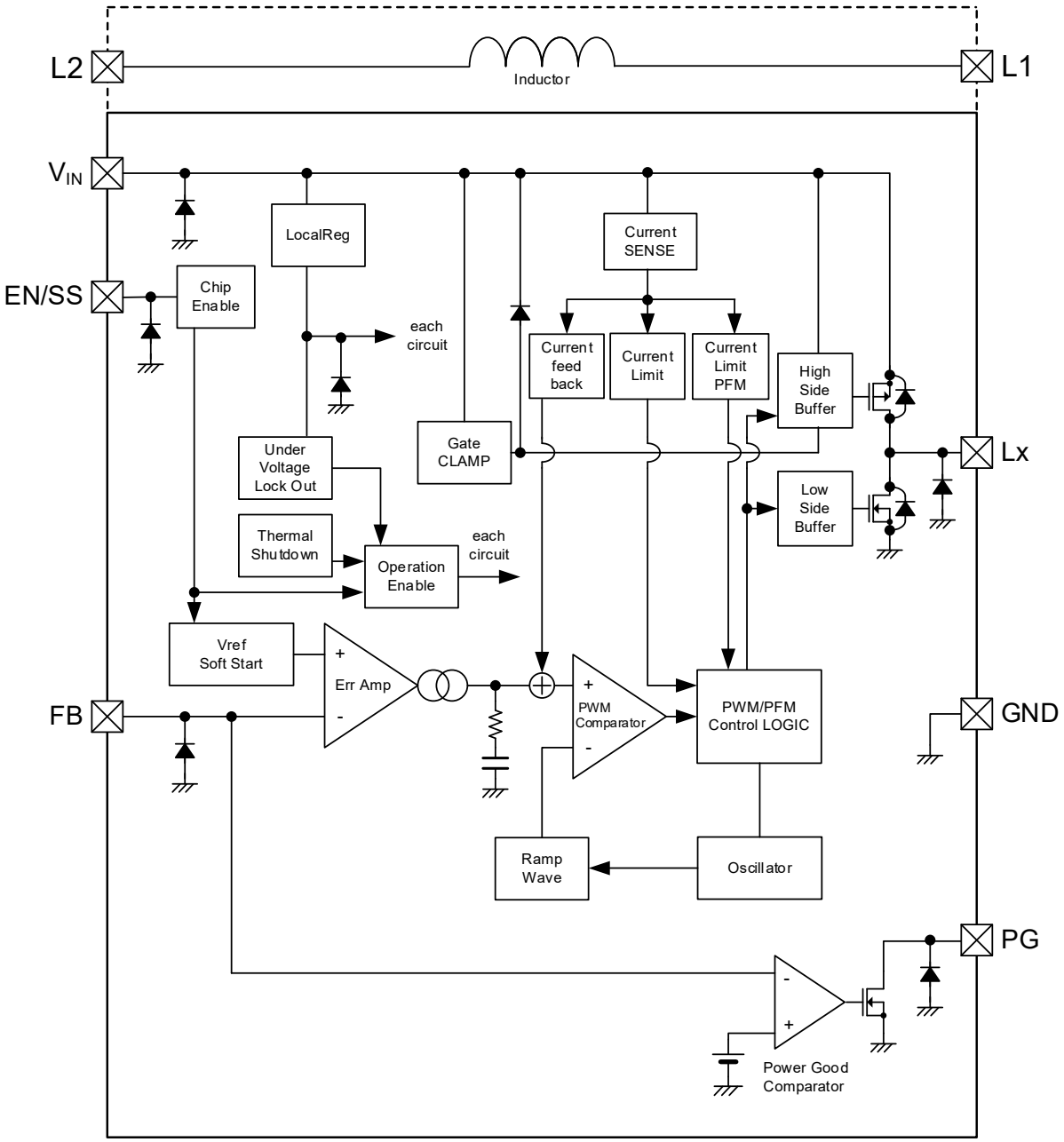

* Diodes inside the circuit are ESD protection diodes and parasitic diodes.

Copyright ©2026 Murata Manufacturing Co., Ltd. All rights reserved.
Specifications are subject to change without notice.

■PIN CONFIGURATION

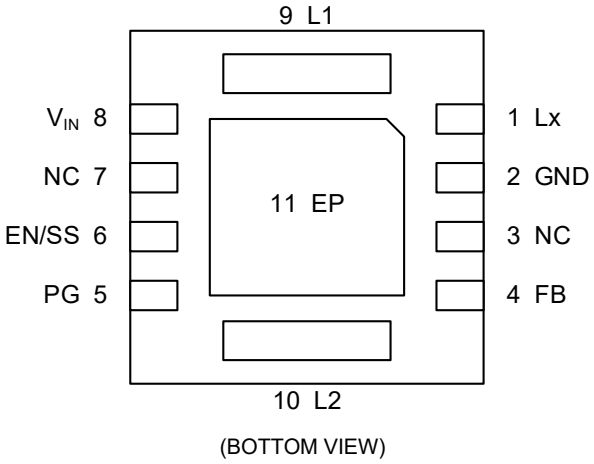

(BOTTOM VIEW)

■PIN ASSIGNMENT

PIN NUMBER	PIN NAME	FUNCTION
1	Lx	Switching Output
2	GND	Ground
3	NC	No Connection
4	FB	Output Voltage Sense
5	PG	Power good Output
6	EN/SS	Enable, Soft-Start
7	NC	No Connection
8	V_{IN}	Power Input
9	L1	Inductor Electrodes
10	L2	Inductor Electrodes
11	EP	Exposed thermal pad. The Exposed pad is recommended to be connected to GND (Pin2)

■FUNCTION CHART

PIN NAME	SIGNAL	STATUS
EN/SS	H	Active
	L	Stand-by
	OPEN	Stand-by

PIN NAME	CONDITION		SIGNAL
PG	EN/SS = H	$V_{FB} > V_{PGDET}$	H (High impedance)
		$V_{FB} \leqq V_{PGDET}$	L (Low impedance)
		Thermal Shutdown	L (Low impedance)
		UVLO ($V_{IN} < V_{UVLOD}$)	Undefined State
	EN/SS = L	Stand-by	L (Low impedance)

Copyright ©2026 Murata Manufacturing Co., Ltd. All rights reserved.
Specifications are subject to change without notice.

■ABSOLUTE MAXIMUM RATINGS

PARAMETER	SYMBOL	RATINGS	UNITS
V_{IN} Pin Voltage	V_{IN}	-0.3 ~ 40.0	V
EN/SS Pin Voltage	$V_{EN/SS}$	-0.3 ~ 40.0	V
FB Pin Voltage	V_{FB}	-0.3 ~ 6.2	V
PG Pin Voltage	V_{PG}	-0.3 ~ 6.2	V
PG Pin Current	I_{PG}	8	mA
Lx Pin Voltage	V_{Lx}	-0.3 ~ V_{IN} + 0.3 or 40.0 (*1)	V
Power Dissipation (Ta = 25℃)	Pd	1950 (JESD51-7 Board) (*2)	mW
V_{IN} Pin Surge Voltage	V_{IN_SURGE}	46.0 (*3)	V
EN/SS Pin Surge Voltage	V_{EN/SS_SURGE}	46.0 (*3)	V
Junction Temperature	Tj	-40 ~ 125	℃
Storage Temperature	Tstg	-55 ~ 150	℃

All voltages are described based on the GND pin.

(*1) The maximum value should be either V_{IN}+0.3V or 40.0V in the lowest.

(*2) The power dissipation figure shown is PCB mounted and is for reference only.
Please refer to PACKAGING INFORMATION for the mounting conditions.

(*3) Applied Time≦400ms

Copyright ©2026 Murata Manufacturing Co., Ltd. All rights reserved.
Specifications are subject to change without notice.

■RECOMMENDED OPERATING CONDITIONS

PARAMETER			SYMBOL	MIN.	TYP.	MAX.	UNITS
Setting Output Voltage Range			V_{OUTSET}	2.8	-	6.0	V
Input Voltage			V_{IN}	3.0	-	36.0	V
Output Current			I_{OUT}	0.0	-	600	mA
EN/SS Pin Voltage			$V_{EN/SS}$	0.0	-	36.0	V
PG Pull-up Voltage			V_{PG}	0.0	-	5.5	V
PG Pull-up Resistor			R_{PG}	5	100	-	kΩ
Operating Ambient Temperature			Topr	-40	-	105	℃
Input Capacitor (Effective Value)			C_{IN}	0.5	-	1000 (*2)	μF
Output Capacitor (Effective Value) (*1)	V_{IN}＜20V	V_{OUTSET}≦3.3V	C_L	13.2	-	1000 (*3)	μF
		3.3V＜V_{OUTSET}≦6V		10.4			
	20V≦V_{IN}	V_{OUTSET}≦3.3V		24.6			
		3.3V＜V_{OUTSET}≦6V		29.6			

All voltages are described based on the GND pin.

(*1) Some ceramic capacitors have an effective capacitance that is significantly lower than the nominal value due to the applied DC bias and ambient temperature. For the input / output capacitance of this IC, use an appropriate ceramic capacitor according to the DC bias usage conditions (ambient temperature, input / output voltage) so that the effective capacitance value is equal to or higher than the recommended component.

(*2) If using a large-capacity capacitor such as an electrolytic capacitor or tantalum capacitor as the input capacitance, place a low ESR ceramic capacitor in parallel. If a ceramic capacitor is not placed, high-frequency voltage fluctuations will increase and the IC may malfunction.

(*3) If a large-capacity capacitor is used as output capacitor, the output stability may be reduced, and the ripple voltage may increase. Even if a large-capacity capacitor such as an electrolytic capacitor or tantalum capacitor is used as output capacitor, please place a low-ESR ceramic capacitor in parallel. Even if the capacitance is within the recommended range, the output stability may be reduced depending on the type and ESR etc. of the capacitor used, so please thoroughly test it on the actual equipment before use.

Copyright ©2026 Murata Manufacturing Co., Ltd. All rights reserved.
Specifications are subject to change without notice.

■ELECTRICAL CHARACTERISTICS

MYRGC075060W31RB/ MYRGC075060B31RB

Ta=25℃

PARAMETER	SYMBOL	CONDITIONS		MIN.	TYP.	MAX.	UNIT	CIRCUIT
Operating Input Voltage Range	V_{IN}	-		3.0	-	36.0	V	-
Setting Output Voltage Range	V_{OUTSET}	-		2.8	-	6.0	V	-
FB Voltage	V_{FBE}	V_{FB}=0.739V→0.761V, V_{FB} Voltage when Lx pin voltage changes from "H" level to "L" level		0.739	0.750	0.761	V	②
Over Voltage Protection	V_{OVP}	-		-	0.81	-	V	-
UVLO Detect Voltage	V_{UVLOD}	$V_{EN/SS}$=12V, V_{IN}: 2.80V→2.60V, V_{IN}=0V V_{IN} Voltage when Lx pin changes from “H” to "L"		2.6	2.7	2.8	V	②
UVLO Release Voltage	V_{UVLOR}	$V_{EN/SS}$=12V, V_{IN}:2.70V→2.90V, V_{FB}=0V V_{IN} Voltage when Lx pin changes from “L” to "H"		2.7	2.8	2.9	V	②
Quiescent Current	I_q	V_{FB}=0.765V	MYRGC075060W31RB	-	270	540	μA	④
			MYRGC075060B31RB	-	11	19	μA	④
Stand-by Current	I_{STB}	V_{IN}=12V, $V_{EN/SS}$=0V		-	0.6	1.2	μA	④
Oscillation Frequency	f_{OSC}	Connected to external components, I_{OUT}=150mA		1.098	1.200	1.302	MHz	①
Minimum Duty Cycle	D_{MIN}	V_{FB}=0.825V		-	-	0	%	②
Maximum Duty Cycle	D_{MAX}	V_{FB}=0.675V		100	-	-	%	②
Lx SW "H" On Resistance	R_{LxH}	V_{FB}=0.6V, I_{Lx}=200mA		-	1.20	1.38	Ω	⑤
Lx SW "L" On Resistance	R_{LxL}	I_{Lx}=200mA		-	0.60	0.70	Ω	-
High side Current Limit (*1)	I_{LIMH}	V_{FB}=V_{FBE}×0.98		1.1	1.4	-	A	-
Internal Soft-Start Time	t_{SS1}	V_{FB}=0.71V		1.0	2.2	4.5	ms	②
External Soft-Start Time	t_{SS2}	V_{FB}=0.71V, R_{SS}=430kΩ, C_{SS}=0.47μF		14	21	32	ms	③

Test Condition: Unless otherwise stated, V_{IN}=12V, $V_{EN/SS}$=12V, V_{PG}: OPEN
Peripheral component connection conditions (V_{OUT}=5.0V): R_{FB1}=680kΩ, R_{FB2}=120kΩ, C_{FB}=15pF, C_L=22μF, C_{IN}=2.2μF

(*1) The current limit indicates the detection level of the peak current flowing through the coil.

Copyright ©2026 Murata Manufacturing Co., Ltd. All rights reserved.
Specifications are subject to change without notice.

■ELECTRICAL CHARACTERISTICS

MYRGC075060W31RB/ MYRGC075060B31RB Ta=25℃

PARAMETER	SYMBOL	CONDITIONS	MIN.	TYP.	MAX.	UNIT	CIRCUIT
PG detect Voltage	V_{PGDET}	V_{FB}=0.712V→0.638V, R_{PG}:100kΩ pull-up to 5V, V_{FB} Voltage when PG pin voltage changes from "H" level to "L" level	0.638	0.675	0.712	V	⑤
PG Output Voltage	V_{PG}	V_{FB}=0.6V, I_{PG}=1mA	-	-	0.3	V	②
PFM Switch Current (MYRGC075060B31RB)	I_{PFM}	Connected to external components, I_{OUT}=0mA	-	350	-	mA	①
FB Voltage Temperature Characteristics	ΔV_{FB}/ (ΔT_{opr}・V_{FBE})	-40℃≦T_{opr}≦105℃	-	±100	-	ppm/℃	②
FB "H" Current	I_{FBH}	V_{IN}=$V_{EN/SS}$=36V, V_{FB}=3.0V	-	0.0	0.1	μA	④
FB "L" Current	I_{FBL}	V_{IN}=$V_{EN/SS}$=36V, V_{FB}=0V	-	0.0	0.1	μA	④
EN/SS "H" Voltage	$V_{EN/SSH}$	$V_{EN/SS}$=0.3V→2.5V, V_{FB}=0.71V EN/SS Voltage when Lx pin voltage changes from "L" level to "H" level	2.5	-	36.0	V	④
EN/SS "L" Voltage	$V_{EN/SSL}$	$V_{EN/SS}$=2.5V→0.3V, V_{FB}=0.71V EN/SS Voltage when Lx pin voltage changes from "H" level to "L" level	GND	-	0.3	V	④
EN/SS "H" Current	$I_{EN/SSH}$	V_{IN}=$V_{EN/SS}$=36V, V_{FB}=0.825V	-	0.1	0.3	μA	④
EN/SS "L" Current	$I_{EN/SSL}$	V_{IN}=36V, $V_{EN/SS}$=0V, V_{FB}=0.825V	-	0.0	0.1	μA	④
Thermal Shutdown Temperature	T_{TSD}	Junction Temperature	-	160	-	℃	-
Thermal Shutdown Hysteresis Width	T_{HYS}	Junction Temperature	-	25	-	℃	-
Inductance	L	Test Freq.=1MHz	-	4.7	-	μH	-

Test Condition: Unless otherwise stated, V_{IN}=12V, $V_{EN/SS}$=12V, V_{PG}: OPEN

Copyright ©2026 Murata Manufacturing Co., Ltd. All rights reserved.
Specifications are subject to change without notice.

■TEST CIRCUITS

CIRCUIT①

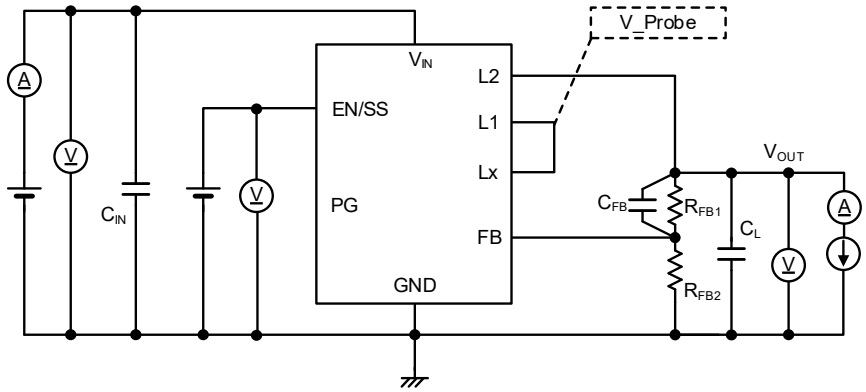

CIRCUIT②

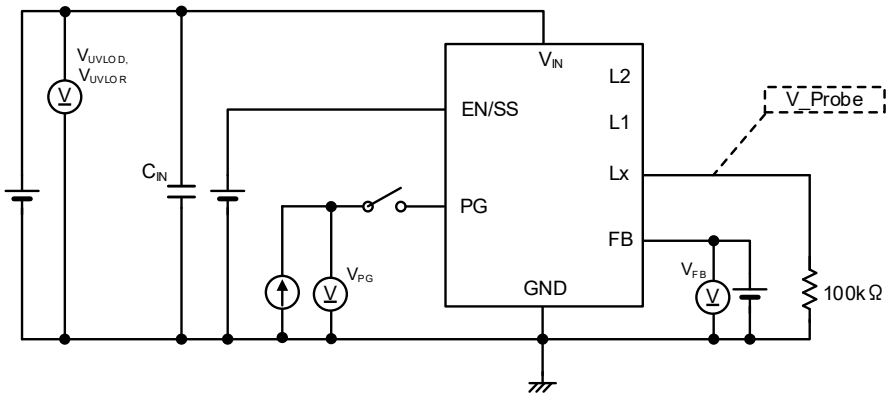

CIRCUIT③

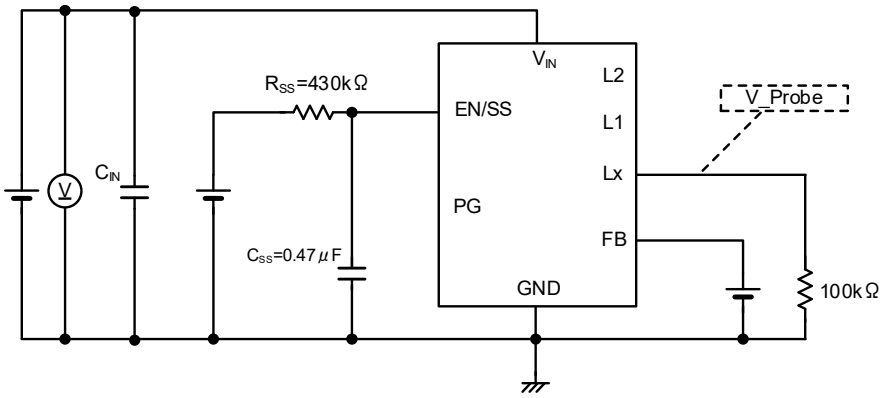

Copyright ©2026 Murata Manufacturing Co., Ltd. All rights reserved.
Specifications are subject to change without notice.

■TEST CIRCUITS

CIRCUIT④

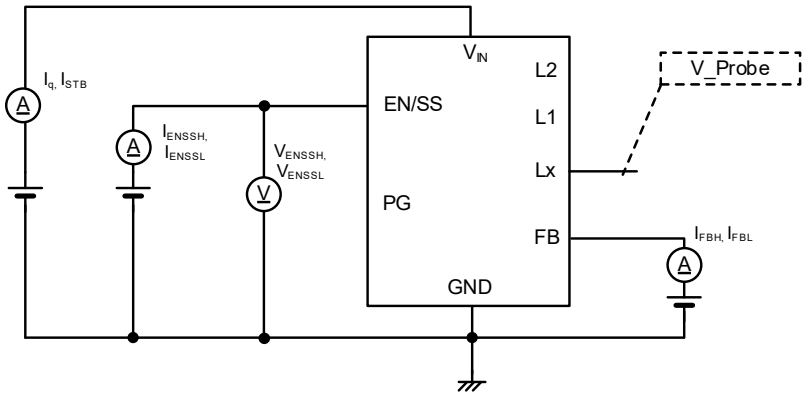

CIRCUIT⑤

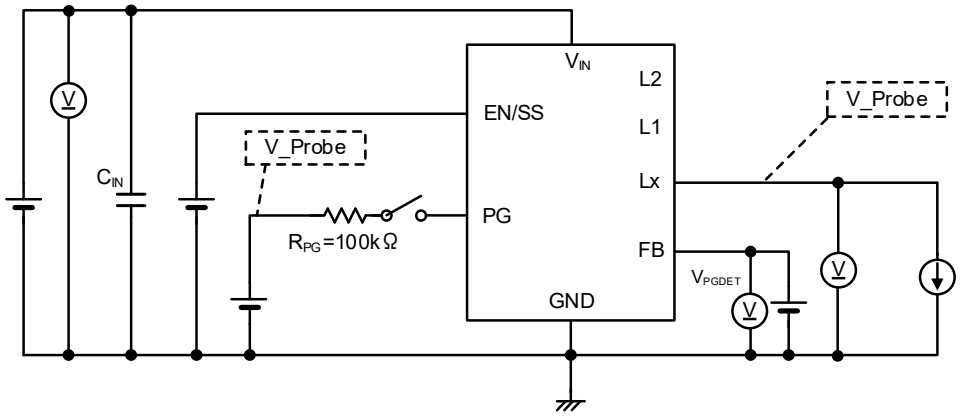

Copyright ©2026 Murata Manufacturing Co., Ltd. All rights reserved.
Specifications are subject to change without notice.

■TYPICAL APPLICATION CIRCUIT / Parts Selection Method

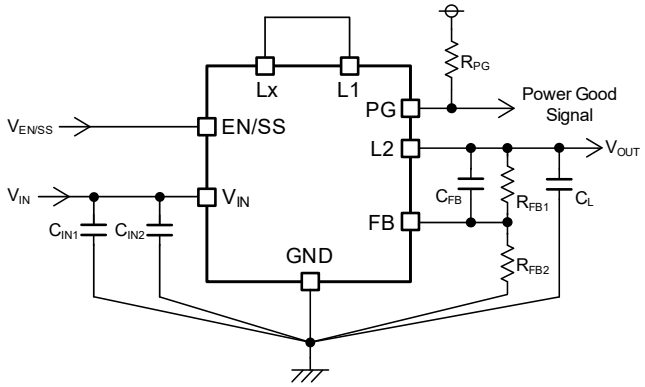

【Typical Example】

	MANUFACTURER	PRODUCT NUMBER	VALUE
C_{IN1}	Murata	GRM21BC71H475KE11	4.7μF/50V
C_{IN2}	Murata	GRM188R71H104KA93 or GRM188R72A104KA35	0.1μF/50V or 0.1μF/100V
C_L	Murata	GRM21BC81C226ME44	22μF/16V 3parallel
	Murata	GRM21BR61A476ME15	47μF/10V 2parallel

(*1) Some ceramic capacitors have an effective capacitance that is significantly lower than the nominal value due to the applied DC bias and ambient temperature. For the input / output capacitance of this IC, use an appropriate ceramic capacitor according to the DC bias usage conditions (ambient temperature, input / output voltage) so that the effective capacitance value is equal to or higher than the recommended component.

(*2) If using a large-capacity capacitor such as an electrolytic capacitor or tantalum capacitor as the input capacitance, place a low ESR ceramic capacitor in parallel. If a ceramic capacitor is not placed, high-frequency voltage fluctuations will increase and the IC may malfunction.

(*3) If a large-capacity capacitor is used as output capacitor, the output stability may be reduced, and the ripple voltage may increase. Even if a large-capacity capacitor such as an electrolytic capacitor or tantalum capacitor is used as output capacitor, please place a low-ESR ceramic capacitor in parallel. Even if the capacitance is within the recommended range, the output stability may be reduced depending on the type and ESR etc. of the capacitor used, so please thoroughly test it on the actual equipment before use.

Copyright ©2026 Murata Manufacturing Co., Ltd. All rights reserved.
Specifications are subject to change without notice.

■TYPICAL APPLICATION CIRCUIT / Parts Selection Method

＜Output voltage setting (V_{OUTSET})＞

The output voltage can be set by adding an external dividing resistor.

The output voltage setting is determined by the equation below based on the values of R_{FB1} and R_{FB2}.

$$V_{OUTSET} = V_{FBE} \times (R_{FB1} + R_{FB2}) / R_{FB2}$$
$$R_{FB2} \leqq 200k\Omega \text{ and } R_{FB1} + R_{FB2} \leqq 1M\Omega$$

If the IC does not operate properly due to external noise, noise resistance performance can be improved by using a combination of R_{FB1} and R_{FB2} that is smaller than the above conditional expression.

＜C_{FB} setting＞

Adjust the value of the phase compensation speed-up capacitor C_{FB} within ±20% using the equation as below.

$$C_{FB} = \frac{1}{2\pi \times fzfb \times R_{FB1}}$$
$$fzfb = \frac{1}{2\pi\sqrt{C_L \times L}}$$

【 Calculation Example 】

To set output voltage to 5.0V, (C_L=22μF×3, L=4.7μH)

V_{OUTSET} = 0.75V×(680kΩ+120kΩ)/120kΩ = 5.0V, and fzfb is set to a target of 9kHz using the above equation,

C_{FB} = 1/(2×π×9kHz×680kΩ) = 26pF, A capacitor of E24 series is 27pF.

【Typical example】

V_{OUTSET}	R_{FB1}	R_{FB2}	L	C_L	C_{FB}	fzfb
3.3V	510kΩ	150kΩ	4.7μH	10μF×2	18pF	16kHz
				22μF×3	36pF	9kHz
5.0V	680kΩ	120kΩ	4.7μH	10μF×2	14pF	16kHz
				22μF×3	27pF	9kHz

Copyright ©2026 Murata Manufacturing Co., Ltd. All rights reserved.
Specifications are subject to change without notice.

■OPERATIONAL EXPLANATION

The MYRGC075060W31RB / MYRGC075060B31RB consist internally of a reference voltage supply with soft-start function, error amplifier, PWM comparator, ramp circuit, oscillator circuit, phase compensation (current feedback) circuit, current limit circuit, current limiting-PFM circuit, High-side driver FET, Low-side driver FET, buffer drive circuit, internal power supply (Local Reg) circuit, under voltage lockout (UVLO) circuit, gate clamp circuit, thermal shutdown circuit etc.

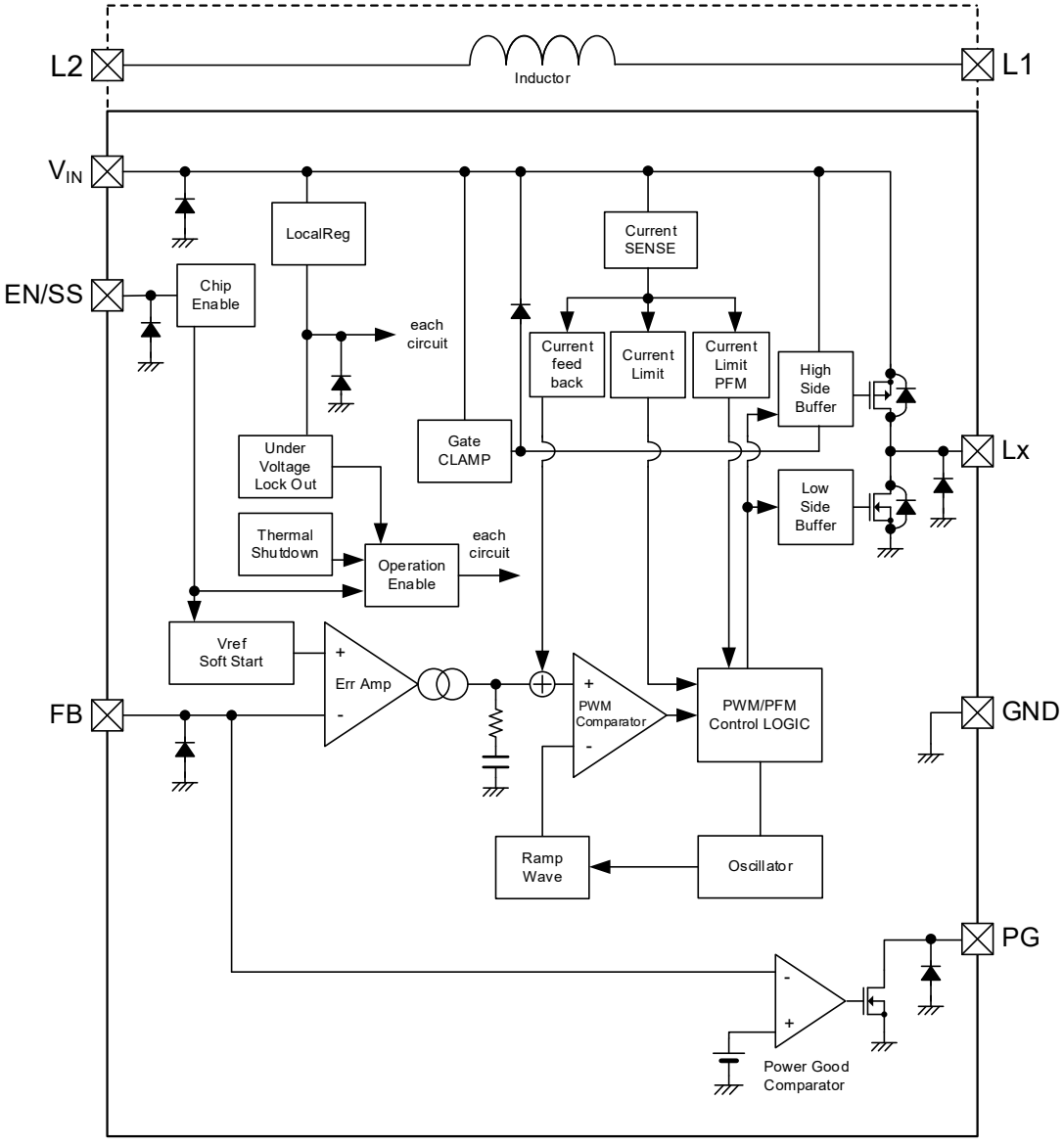

Copyright ©2026 Murata Manufacturing Co., Ltd. All rights reserved.
Specifications are subject to change without notice.

■OPERATIONAL EXPLANATION

＜Normal operation＞

The reference voltage Vref and FB pin voltage are compared using an error amplifier, the output from the error amplifier is phase compensated, and the signal is input to the PWM comparator to determine the ON time of switching during PWM operation.

The output signal from the error amplifier is compared to the ramp wave by the PWM comparator, and the output is sent to the buffer drive circuit and output from the Lx pin as the duty width of switching. This operation is performed continuously to stabilize the output voltage.

The current sense circuit monitors the driver FET current at each switching, and the output signal from the error amplifier is modulated as a multi-feedback signal(current feedback circuit). This achieves a stable feedback system to be obtained even when a low ESR capacitor such as a ceramic capacitor is used, and this stabilizes the output voltage.

MYRGC075060W31RB: F-PWM control

MYRGC075060W31RB operates at a constant frequency f_{OSC} regardless of the output current, making it easy to filter switching noise.

Also, if the FB pin voltage remains higher than V_{FB}, the switching operation will be stopped (High side driver FET turned off, Low side driver FET turned on) until the FB pin voltage drops.

MYRGC075060B31RB: PWM/PFM control

MYRGC075060B31RB operates in PWM/PFM automatic switching mode.

PWM/PFM automatic switching control drops the switching frequency during light loads by turning on the High side driver FET when the coil current reaches the I_{PFM} (TYP. 300mA).

This operation reduces the loss during light loads and achieves high efficiency from light to heavy loads. As the output current increases, the switching frequency increases proportional to the output current, and when the switching frequency increases f_{OSC}, the circuit switches from PFM control to PWM control and the switching frequency becomes fixed.

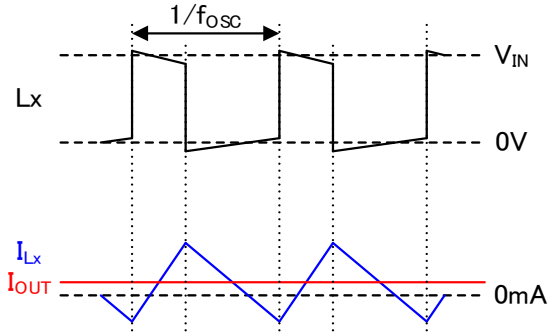

MYRGC075060W31RB (F-PWM control) :
Example of light load operation

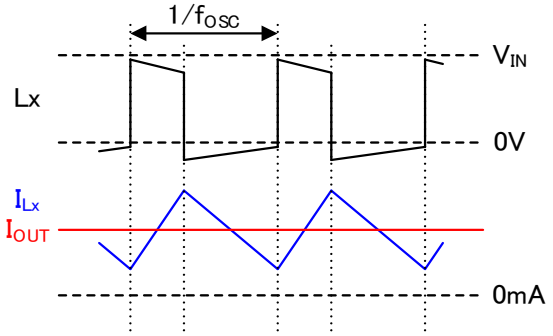

MYRGC075060W31RB (F-PWM control) :
Example of heavy load operation

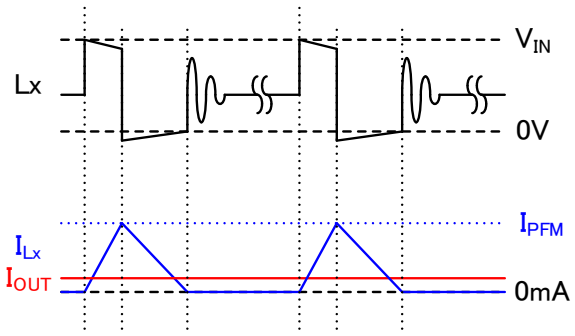

MYRGC075060B31RB (PWM/PFM control) :
Example of light load operation

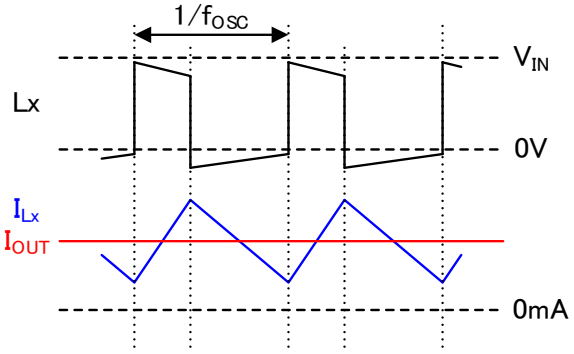

MYRGC075060B31RB (PWM/PFM control) :
Example of heavy load operation

Copyright ©2026 Murata Manufacturing Co., Ltd. All rights reserved.
Specifications are subject to change without notice.

■OPERATIONAL EXPLANATION

＜EN Function / Start Mode・Soft-start Function＞

The state of the IC can be switched by applying voltage to the EN/SS pin.

SIGNAL	STATUS
H	Active
L	Stand-by
OPEN	Stand-by

EN/SS=”L” : Stand-by mode

When the "L" voltage is input to the EN/SS pin, the IC enters the stand-by mode, and the current consumption is reduced to the stand-by current I_{STB} (TYP. 0.6μA). In the stand-by mode, no signal is output to the Lx pin and the output voltage does not rise. In addition, various protection functions stop operating.

EN/SS=”H” : Active mode

When the EN/SS pin voltage is "H", the IC becomes active. When the IC becomes active, it enters start-up mode and increases the output voltage to the set output voltage. In start-up mode, a soft-start function is provided to gently raise the output voltage to suppress inrush current at start-up. The soft-start time can be adjusted by externally mounting a capacitor and resistor on the EN/SS pin. During the start-up mode, the device operates in the same way as in normal operation, except that the reference voltage increases linearly.

(a) Internal soft-start time (without external RC)

When the EN/SS pin voltage rises steeply, the output voltage rises with an internally set soft-start time of t_{ss1} (TYP. 2.2ms) and shifts to normal mode.



(b) Soft-start time external adjustment (with external RC)

The soft-start time can be adjusted by externally mounting a capacitor and resistor on the EN/SS pin.

The externally set soft-start time (t_{SS2}) is determined by the following formula, depending on the EN/SS pin voltage ($V_{EN/SS}$), R_{SS}, and C_{SS} values.

$$t_{ss2} = C_{ss} \times R_{ss} \times \ln \frac{V_{EN/SS}}{V_{EN/SS} - 1.16\mathrm{V}}$$

For example, When the soft-start time at C_{SS} = 0.47μF, R_{SS} = 430kΩ, $V_{EN/SS}$ = 12V

$$t_{ss2} = 0.47 \times 10^{-6} \times 430 \times 10^{3} \times \ln \frac{12}{12 - 1.16} = 21\mathrm{ms}$$

However, it cannot start faster than the internally setting soft-start time t_{ss1}.

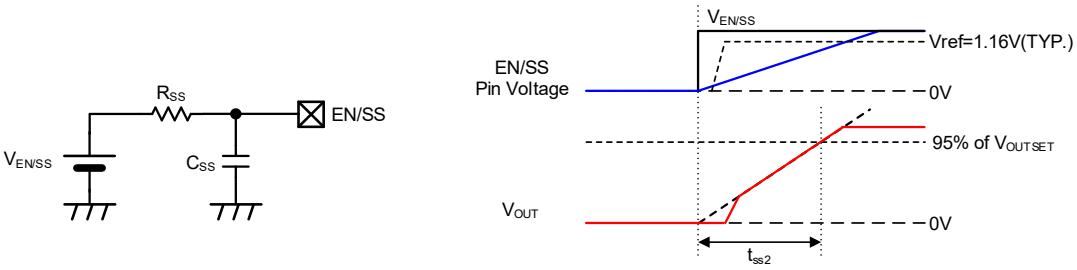

* Definition of soft-start time: Time from $V_{EN/SS}$ start-up until output voltage reaches 95% of set output voltage.

Copyright ©2026 Murata Manufacturing Co., Ltd. All rights reserved.
Specifications are subject to change without notice.

■OPERATIONAL EXPLANATION

＜Current Limit ＞

The current limit circuit of this IC detects the current flowing through the driver FET connected to Lx pin and equivalently monitors the coil current. The current limit function operates when over current is detected. When the current limit function operates, the High side current limit function and Low side current limit function operate.

The current limit state continues until the overcurrent state is released, and the output voltage automatically recovers when the overcurrent state is released.

A current fold-back circuit is used for the current limit function.

The current foldback circuit reduces the current limit when the output voltage drops. This operation reduces the output current when the output voltage drops.

High side Current Limit

The High side current limit function detects when the coil current exceeds the High side current limit value I_{LIMH} (TYP. 1.4A) and turns off the High side driver FET. In other words, it controls the coil current so that it does not exceed a certain peak value. However, if the input voltage is high, the coil current peak value may exceed I_{LIMH} due to the operation delay of the internal circuit.

Low side Current Limit

The Low side current limit function turns on the Low side driver FET until the coil current becomes less than the Low side current limit value I_{LIML} (TYP. 1.0A). In other words, it controls the coil current to stay below a certain coil current bottom value.

The current limit function also operates during start-up mode.

During start-up mode, the output voltage is lower than the set output voltage, the current limit value is reduced, which speeds up overcurrent detection.

If an output capacitance with a higher effective capacitance value than the recommended component is used, the start-up will take place while the current limit function is operating, and the start-up time may be much longer than the soft-start time.

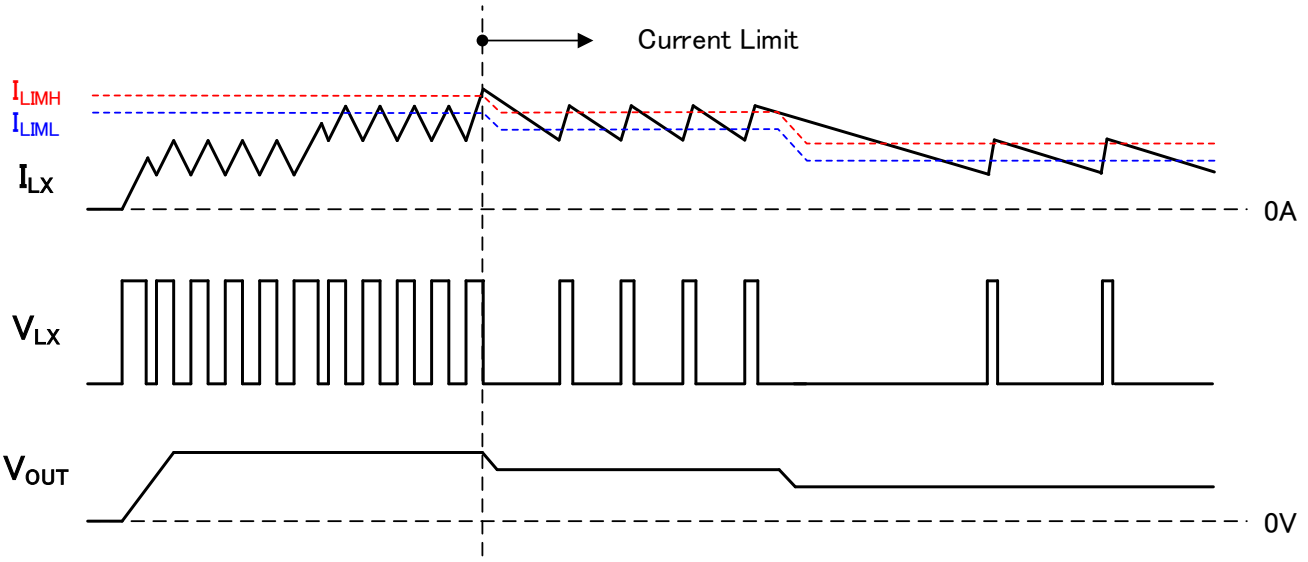

Copyright ©2026 Murata Manufacturing Co., Ltd. All rights reserved.
Specifications are subject to change without notice.

■OPERATIONAL EXPLANATION

＜Thermal Shutdown ＞

The junction temperature is monitored to protect the IC from thermal destruction.

When the junction temperature reaches the thermal shutdown detection temperature T_{TSD} (TYP. 160°C), the thermal shutdown activated, the High side driver FET and Low side driver FET are turned off. When the junction temperature drops to the thermal shutdown release temperature T_{TSD}-T_{HYS} (TYP. 135℃) by stopping the current supply, the output voltage is turned on by the start-up mode, and then normal operation starts.

In the MYRGC075060B31RB, the thermal shutdown function is disabled during PFM control to reduce current consumption under light load conditions. The thermal shutdown function becomes active when the output current increases and the operation transitions to PWM control.

＜UVLO＞

This function monitors the internal power supply of the IC and prevents false pulse output from the Lx pin due to unstable operation when the internal power supply is low. As the IC's internal power supply drops as the V_{IN} pin voltage drops, the UVLO function operates.

When the V_{IN} pin voltage falls below V_{UVLOD} (TYP. 2.7V), the UVLO function operates, and forcibly turns off the driver FETs.

When the V_{IN} pin voltage rises above V_{UVLOR} (TYP. 2.8V), the UVLO function is released, and the output voltage rises according to the start-up mode.

Moreover, during the UVLO operation, the internal circuit is operating because stopping by UVLO is not same to a stand-by mode and just switching operation is stopped.

＜Negative Current Limit ＞

When the output voltage becomes higher than the set voltage, the Low side driver FET turns on to reduce the output voltage. If the Low side driver FET continues to be turned on, the coil current reverses and a negative current continues to flow.
This reverse current is limited to -900mA (TYP.) by the negative current limit function.

When the negative current limit function operates, the Low side driver FET turns off and remains until the next cycle. During this period, the reverse current flows through the parasitic diode of the High side driver FET into the power supply connected to the V_{IN} pin.

If the negative current limit function operates during start-up mode, the switching operation stops until the reference voltage becomes higher than the FB voltage.

＜Over Voltage Protection ＞

An output overvoltage protection function is built in to suppress output voltage overshoot after startup is complete or after load transient response. When the FB pin voltage reaches V_{OVP} (TYP. 0.81V) or higher, the output overvoltage protection function operates and forcibly turns off the High side driver FET.

In F-PWM control (MYRGC075060W31RB), the Low side driver FET turns on immediately after the output overvoltage protection function operates and remains in that state until the next cycle.

In PWM/PFM automatic switching control (MYRGC075060B31RB), the output overvoltage protection function turns off the driver FET. When the output voltage drops to the set value due to the output current switching operation resumes.

Copyright ©2026 Murata Manufacturing Co., Ltd. All rights reserved.
Specifications are subject to change without notice.

■OPERATIONAL EXPLANATION

＜Power Good ＞

The power good function allows monitoring the output status and IC status.

CONDITIONS		SIGNAL
EN/SS = H	$V_{FB} > V_{PGDET}$	H (High impedance)
	$V_{FB} \leqq V_{PGDET}$	L (Low impedance)
	Thermal Shutdown	L (Low impedance)
	UVLO ($V_{IN} < V_{UVLOD}$)	Undefined State
EN/SS = L	Stand-by	L (Low impedance)

The PG pin is an Nch open drain output, therefore a pull-up resistance (approx. 100kΩ) must be connected to the PG pin. When the power good function is not used, connect the PG pin to GND or leave it open.

A delay time of 400μs(TYP.) is provided from the moment, the FB pin voltage drops below V_{PGDET} to PG="L".
If the FB pin voltage returns to a voltage higher than V_{PGDET} during the delay time, PG remains “H”.
This prevents PG="L" due to output undershoot during transient response.
In addition, there is no intentional delay for PG="L" due to the operation of the protection function or transition to the stand-by state.

Copyright ©2026 Murata Manufacturing Co., Ltd. All rights reserved.
Specifications are subject to change without notice.

■NOTES ON USE

1) For the phenomenon of temporal and transitional voltage decrease or voltage increase, the IC may be damaged or deteriorated if IC is used beyond the absolute MAX. specifications. Also, if used under out of the recommended operating range, the IC may not operate normally or may cause deterioration.

If a voltage exceeding the absolute maximum voltage is applied to the IC due to chattering caused by a mechanical switch or an external surge voltage, please use a protection circuit as a countermeasure. Please see the countermeasures from (a) to (d) shown below.

(a) When voltage exceeding the absolute maximum ratings comes into the V_{IN} pin due to the transient change on the power line, there is a possibility that the IC breaks down in the end. To prevent such a failure, please add a TVS between V_{IN} and GND as a countermeasure.

(b) When the input voltage decreases below the output voltage, there is a possibility that an overcurrent will flow in the IC’s internal parasitic diode and exceed the absolute maximum rating of the Lx pin.
If the current is pulled into the input side by the low impedance between Vin and GND, then please add an SBD between V_{OUT} and V_{IN} as a countermeasure.

(c) When a negative voltage is applied to the input voltage by a reverse connection or chattering, an overcurrent could flow in the IC’s parasitic diode and damage the IC. Please add a reverse touching protection diode as a countermeasure.

(d) When a sudden surge of electrical current travels along the V_{OUT} pin and GND due to a short-circuit, electrical resonance of circuit involving parasitic inductor of cable related to short circuit. An output capacitor (C_L) and impedance such as V_{OUT} line generates a negative voltage exceeding the breakdown voltage and may damage the device. Please take measures such as adding an SBD between V_{OUT} and GND.

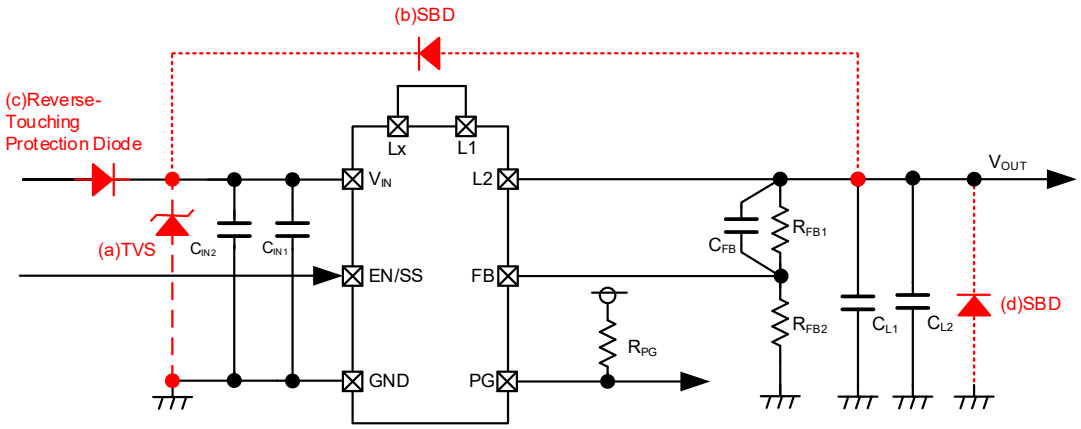

2) Switching regulators such as DC-DC converters generate spike noise and ripple voltage. The DC-DC converter characteristics depend greatly on the externally connected components such as coil inductance value, capacitor, board layout of peripheral components. Please refer to the specifications and standard circuit examples of each component when carefully considering which components to select.

Copyright ©2026 Murata Manufacturing Co., Ltd. All rights reserved.
Specifications are subject to change without notice.

■NOTES ON USE

3) Stable Operating Range

The recommended operating range of this IC can operate normally varies depending on the product number.
Please confirm that the power supply specifications you are using are within the recommended operating range before use.

V_{OUTSET}-V_{IN} Stable operating range

MYRGC075060W31RB (F-PWM control)

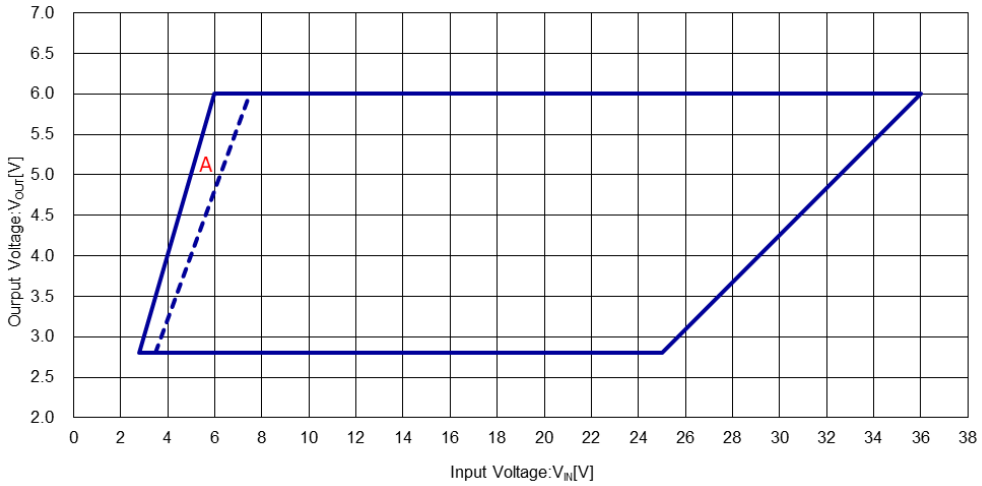

MYRGC075060B31RB (PWM/PFM control)

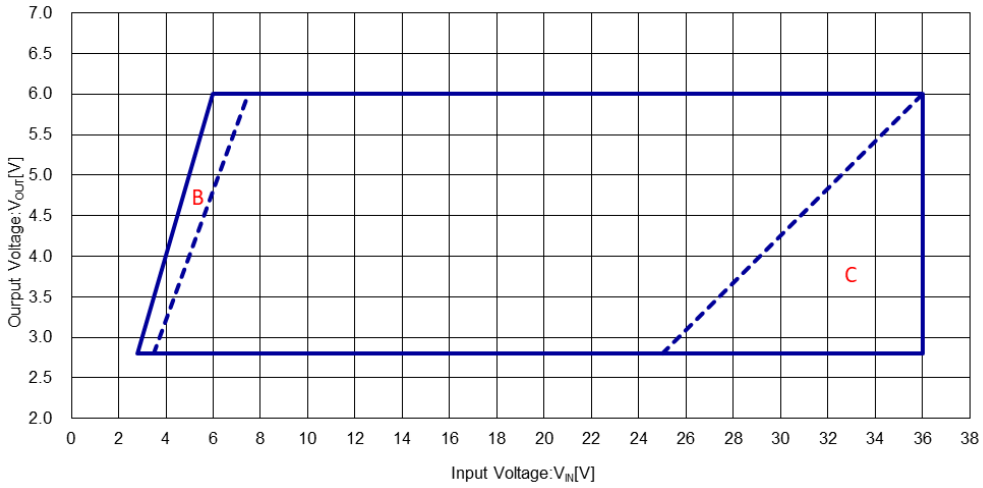

【Within stable operating range】

Please note the following points when using in areas A to C within the stable operating range.

(A) The switching frequency may drop or the V_{OUT} ripple voltage may increase near the switch to 100% Duty cycle.
(B) The coil current may reverse, and the efficiency may drop significantly due to F-PWM operation instead of PFM operation at light loads. In addition, the switching frequency may drop and the V_{OUT} ripple voltage may increase near the switch to 100% Duty cycle.
(C) Due to the Minimum On-time, the Lx oscillation may become unstable and the V_{OUT} ripple voltage may increase, or the IC may not switch to PWM operation up to the maximum output current.

【Outside stable operating range】

If the IC is used over the stable operating range, the following operations may occur, and the IC may not operate normally.

(a) When the step-down ratio is high, the Min On Time may cause the Lx oscillation to become unstable or pulse skipping may occur, resulting in large ripple voltage.
(b) When the step-down ratio is low, the IC operates at the Maximum Duty Cycle and the output voltage may drop below the set output voltage.

Copyright ©2026 Murata Manufacturing Co., Ltd. All rights reserved.
Specifications are subject to change without notice.

■NOTES ON USE

4) The ripple voltage could be increased when switching from discontinuous conduction mode to continuous conduction mode and when switching to 100% Duty cycle.

5) When using an external soft start using the EN/SS pin, if the EN/SS pin is at an intermediate voltage when powering on, etc., the external soft start may not work and an increase in inrush current may result.

6) The output overvoltage protection function suppresses output voltage overshoot, but at the same time, it also suppresses the operation of the error amplifier.
As a result, the output overvoltage protection function and the error amplifier may interact with each other, causing the output voltage to become unstable. If the output overvoltage protection function is activated due to a sudden load change, etc., and the output voltage becomes unstable, take measures such as increasing the output capacity.

7) In the MYRGC075060B31RB, the thermal shutdown function is disabled during PFM control to reduce current consumption under light load conditions. The thermal shutdown function becomes active when the output current increases and the operation transitions to PWM control. However, under high input voltage conditions, the transition current from PFM to PWM control increases; therefore, the thermal shutdown function may only become effective near the maximum output current.

8) Murata places an importance on improving our products and their reliability. We request that users incorporate fail safe designs and post aging protection treatment when using Murata products in their systems.

9) This IC is an Inductor Built-in product, do not place it in an environment with a strong magnetic field such as near a magnet. The influence of a strong magnetic field may cause a decrease in inductance value, deterioration of efficiency, and abnormal operation of the IC.

10) The internal coil is for this product only. Do not use it for any purpose other than this product.

Copyright ©2026 Murata Manufacturing Co., Ltd. All rights reserved.
Specifications are subject to change without notice.

■NOTES ON USE

11) Instructions of pattern layouts.
Especially noted in the pattern layout are as follows.
Please refer to the reference pattern layout on the following.

(a) Wire the large current line using thick, short connecting traces.
This makes it possible to reduce the wire impedance, which is expected to reduce noise and improve heat dissipation.
If the wire impedance of the large current line is large, it may cause noise or the IC to not operate normally.
Especially when the noise is large, the current limit function and the integral latch function may not work.

(b) Place the input capacitance C_{IN}, output capacitance C_L, IC which the large current flows on the same surface.
If they are placed on both sides, a large current will flow through Via, which has high impedance, it may cause noise and the IC may not operate normally.

(c) Please mount each external component as close to the IC as possible.
Especially place the output capacitance C_L near the IC and connect it with as low impedance as possible.
If the output capacity C_L and IC are too far apart, it may cause noise, or the IC may not operate normally.

(d) The FB line connected to the FB pin is extremely sensitive to noise, so connect it with the shortest possible wire. If the FB line is long, the IC may not operate normally due to switching noise and external noise.
If the IC does not operate normally due to external noise, etc., please review the board layout or adjust the value of FB resistance to low.
If the FB resistance value is lowered, the efficiency during PFM operation may decrease. Please use it after confirming it with the actual machine.

Layer 1

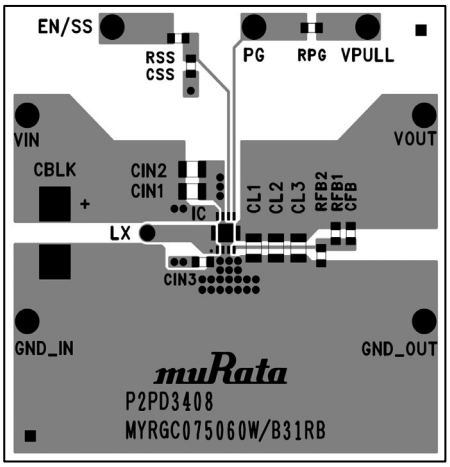

Layer 2

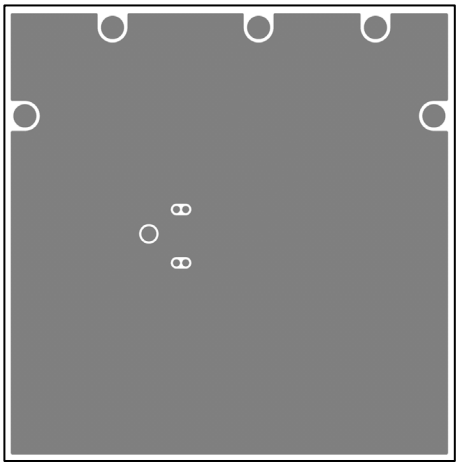

Layer 3

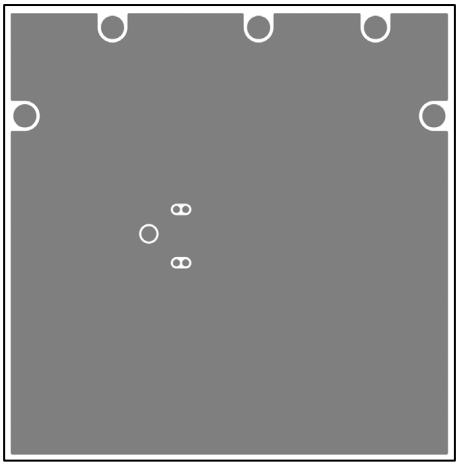

Layer 4

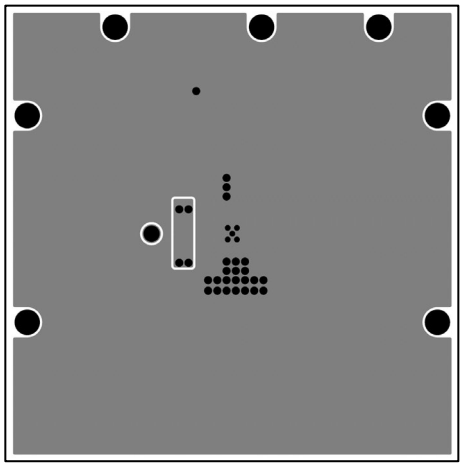

Copyright ©2026 Murata Manufacturing Co., Ltd. All rights reserved.
Specifications are subject to change without notice.

■Notes on handling of product

(1) The coil mounted on this product complies with the general surface mount type chip inductor specifications, and may have scratches, flux stains, etc.

(2) Do not use this product in the following environments. Places exposed to water or salt water, places where condensation occurs, places where toxic gases (hydrogen sulfide, zinc acid, chlorine, ammonia, etc.) are present.

(3) Please do not wash this product with solvent.

■ABOUT IMPLEMENTATION

(1) This product is only suitable for reflow soldering (it is not suitable for flow soldering).

(2) This product uses solder to mount the coil on top of the package. This is no problem for regular circuit board mounted reflow, but if excessive impact is applied during reflow, the mounted coil could be moved out of position or the coil could fall off. Be careful not to strike the circuit board during circuit board mounting reflow.

Copyright ©2026 Murata Manufacturing Co., Ltd. All rights reserved.
Specifications are subject to change without notice.

■TYPICAL PERFORMANCE CHARACTERISTICS

PRODUCTS	CONDITIONS	C_{IN}	C_L
MYRGC075060W31RB MYRGC075060B31RB (f_{OSC}=1.2MHz)	V_{IN}=12V, V_{OUT}=3.3V	4.7uF (GRM21BC71H475KE11)	47µF×2 (GRM21BR61A476ME15)
	V_{IN}=12V, V_{OUT}=5.0V	4.7uF (GRM21BC71H475KE11)	47µF×2 (GRM21BR61A476ME15)
	V_{IN}=24V, V_{OUT}=3.3V	4.7uF (GRM21BC71H475KE11)	47µF×2 (GRM21BR61A476ME15)
	V_{IN}=24V, V_{OUT}=5.0V	4.7uF (GRM21BC71H475KE11)	47µF×2 (GRM21BR61A476ME15)

Copyright ©2026 Murata Manufacturing Co., Ltd. All rights reserved.
Specifications are subject to change without notice.

■TYPICAL PERFORMANCE CHARACTERISTICS

(1) Efficiency vs. Output current (MYRGC075060W31RB / MYRGC075060B31RB)

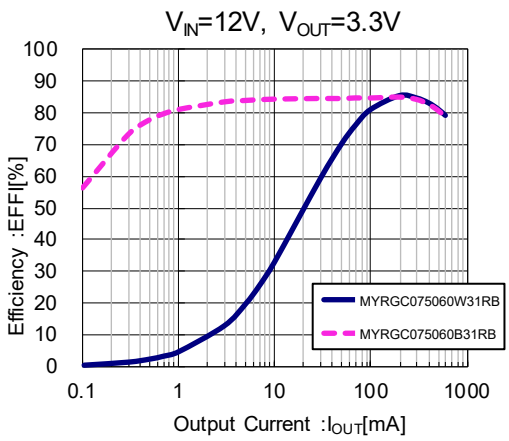

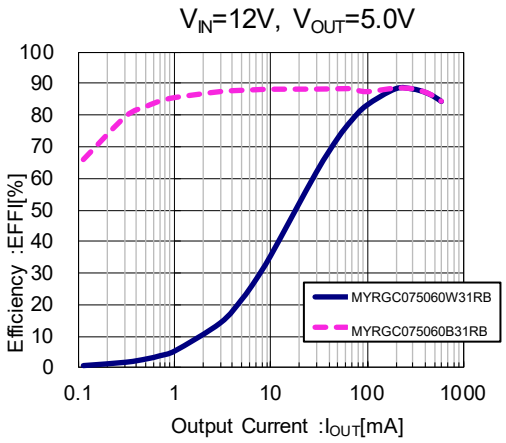

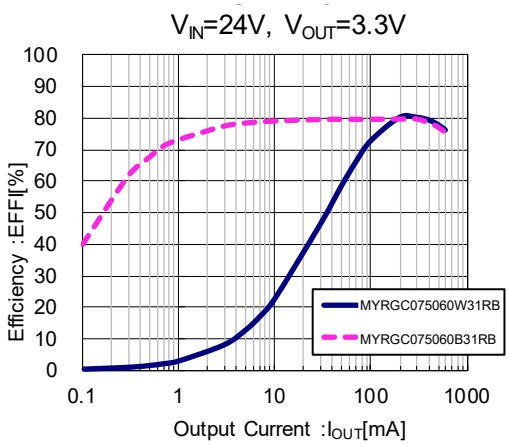

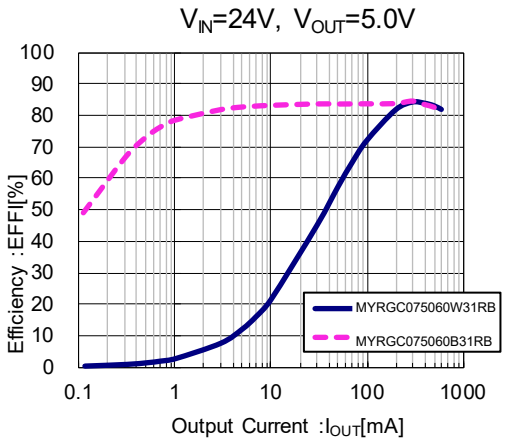

Copyright ©2026 Murata Manufacturing Co., Ltd. All rights reserved.
Specifications are subject to change without notice.

■TYPICAL PERFORMANCE CHARACTERISTICS

(2) Output Voltage vs. Output Current (MYRGC075060W31RB / MYRGC075060B31RB)

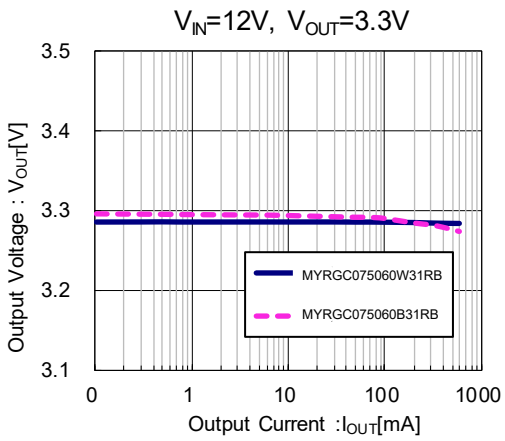

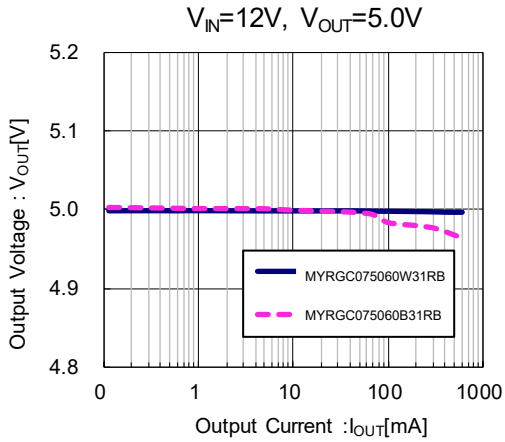

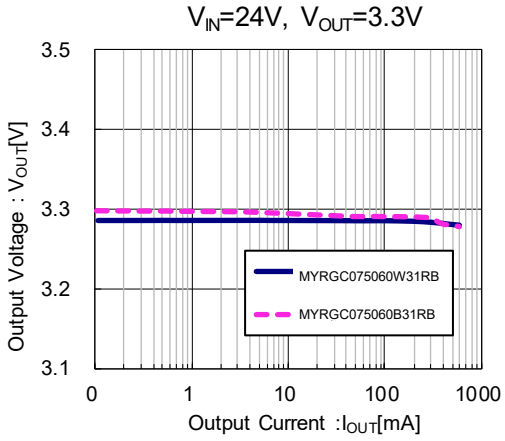

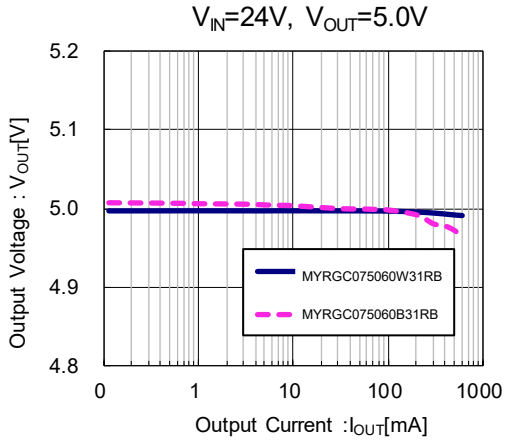

Copyright ©2026 Murata Manufacturing Co., Ltd. All rights reserved.
Specifications are subject to change without notice.

■TYPICAL PERFORMANCE CHARACTERISTICS

(3) Ripple Voltage vs. Output Current (MYRGC075060W31RB / MYRGC075060B31RB)

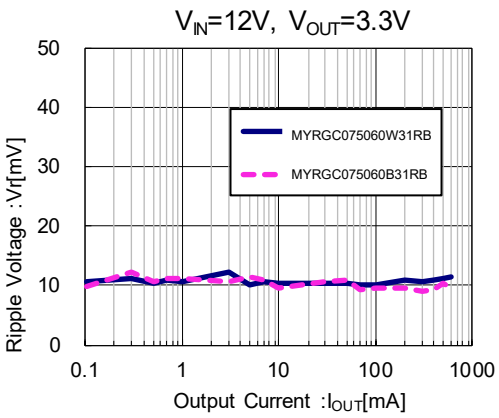

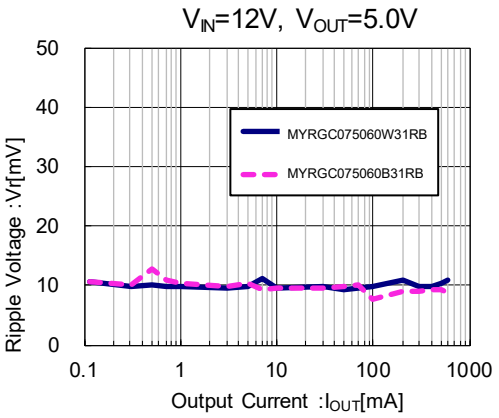

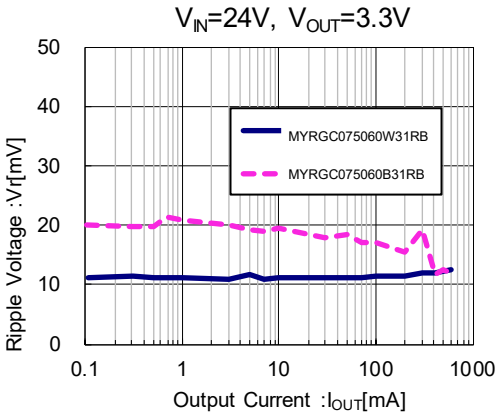

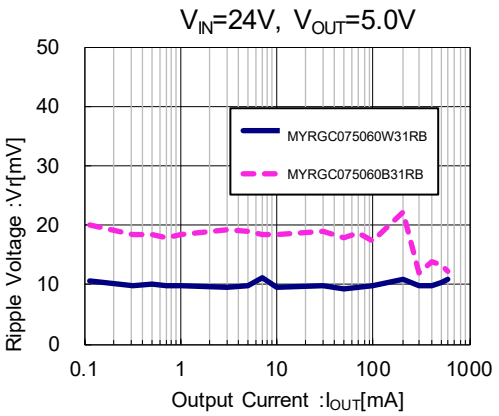

Copyright ©2026 Murata Manufacturing Co., Ltd. All rights reserved.
Specifications are subject to change without notice.

■TYPICAL PERFORMANCE CHARACTERISTICS

(4) FB Voltage vs. Ambient Temperature

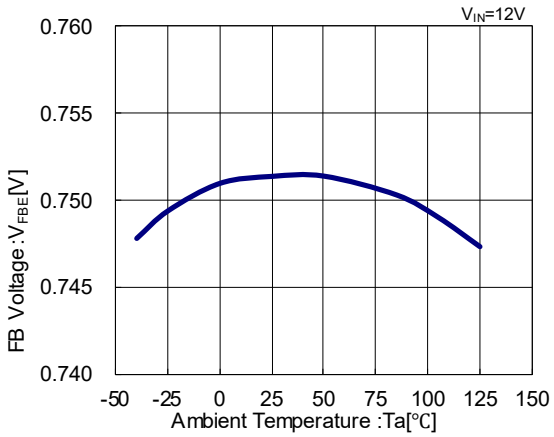

(5) UVLO Voltage vs. Ambient Temperature

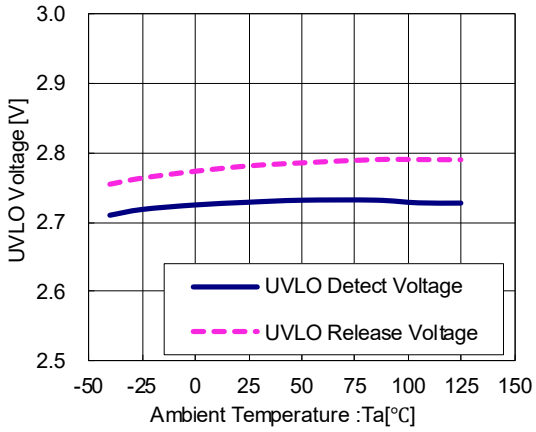

(6) Oscillation Frequency vs. Ambient Temperature

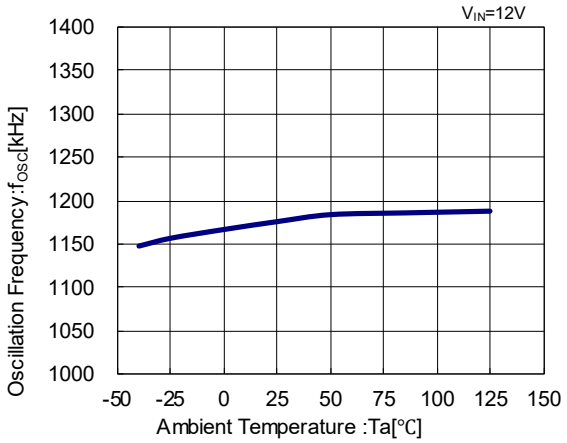

(7) Stand-by Current vs. Ambient Temperature

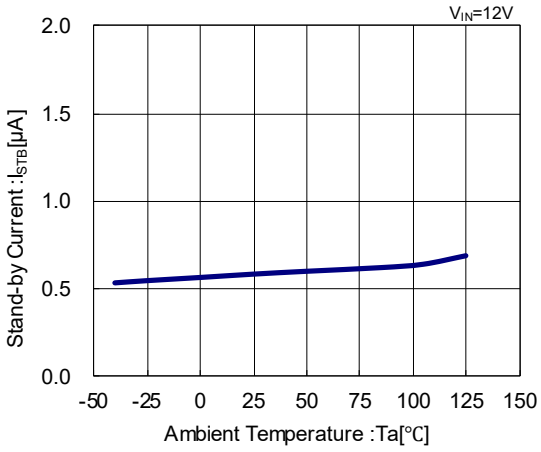

(8) Lx SW On Resistance vs. Ambient Temperature

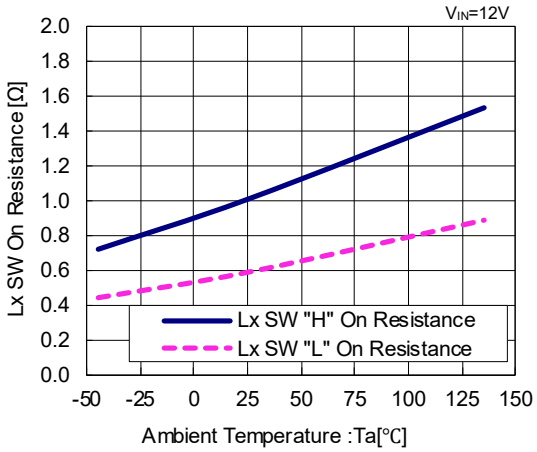

Copyright ©2026 Murata Manufacturing Co., Ltd. All rights reserved.
Specifications are subject to change without notice.

■TYPICAL PERFORMANCE CHARACTERISTICS

(9) Quiescent Current vs. Ambient Temperature

MYRGC075060W31RB

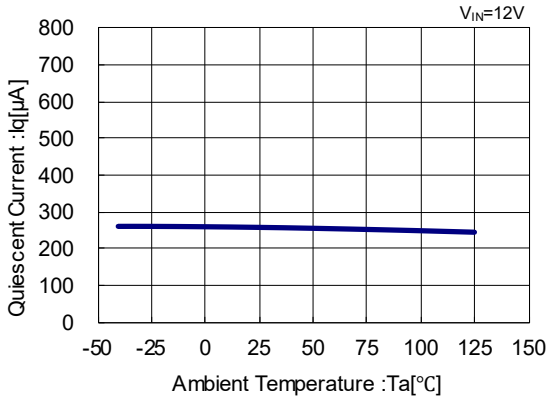

MYRGC075060B31RB

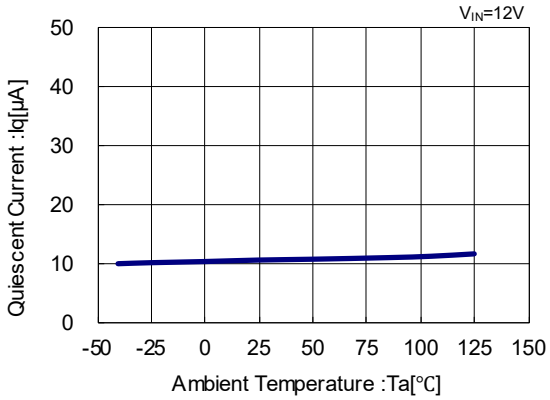

(10) Internal Soft-Start Time vs. Ambient Temperature

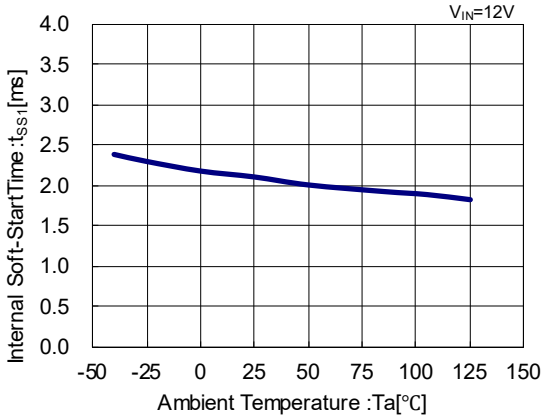

(11) External Soft-Start Time vs. Ambient Temperature

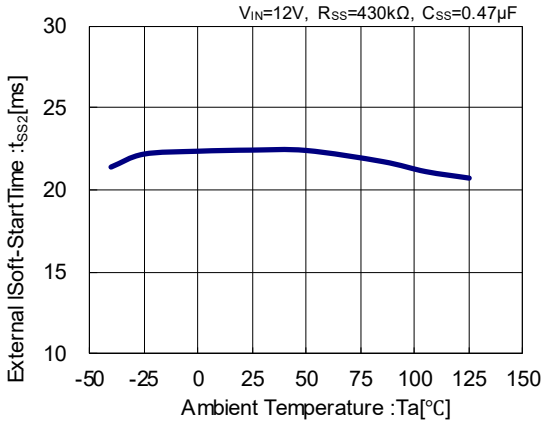

(12) EN/SS Voltage vs. Ambient Temperature

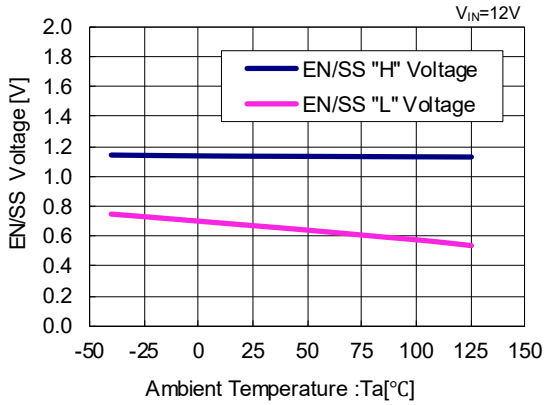

(13) Output Current Operation Area

MYRGC075060W31RB / MYRGC075060B31RB (f_{osc}=1.2MHz)
V_{OUT}=3.3V, 5.0V

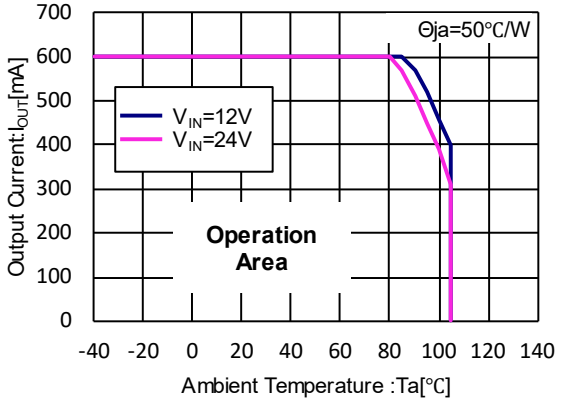

Copyright ©2026 Murata Manufacturing Co., Ltd. All rights reserved.
Specifications are subject to change without notice.

■TYPICAL PERFORMANCE CHARACTERISTICS

(14) PG Detect Voltage vs. Ambient Temperature

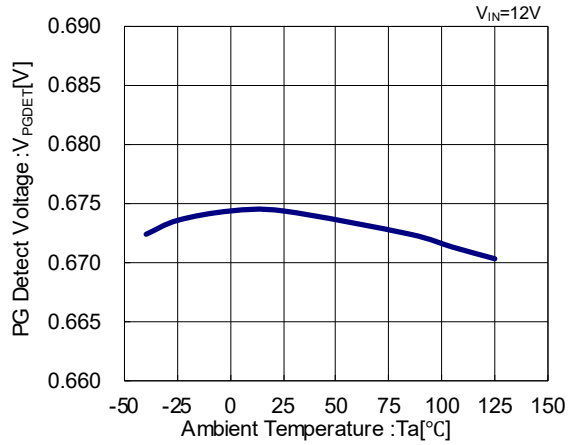

(15) PG Output Voltage vs. Ambient Temperature

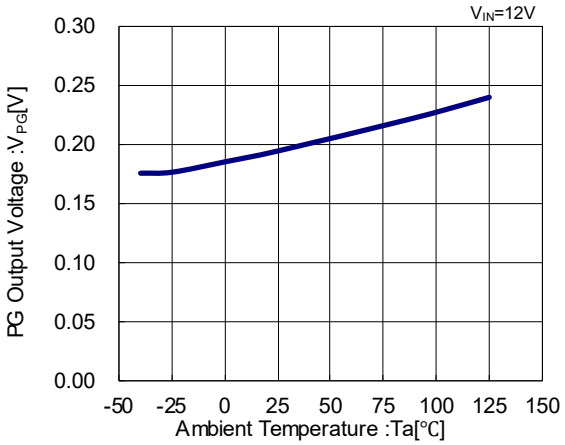

(16) Coil Direct Current Resistance vs. Ambient Temperature

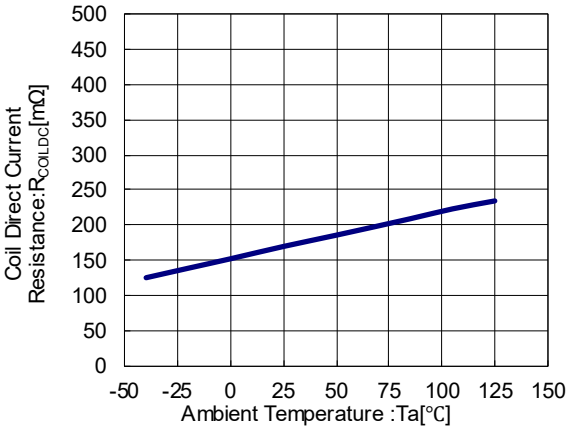

Copyright ©2026 Murata Manufacturing Co., Ltd. All rights reserved.
Specifications are subject to change without notice.

■TYPICAL PERFORMANCE CHARACTERISTICS

(17) Load Transient Response

MYRGC075060W31RB

V_{IN}=12V, V_{OUT}=3.3V, I_{OUT}=10mA→300mA, tr=tf=5μs, f_{OSC}=1.2MHz

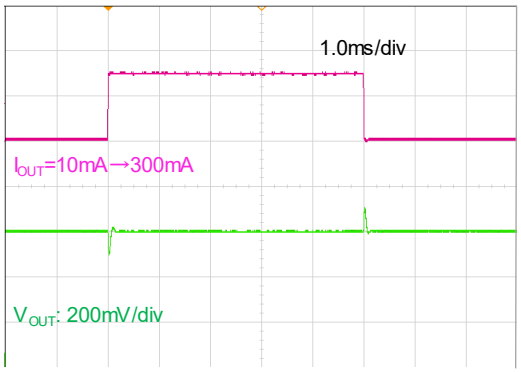

MYRGC075060B31RB

V_{IN}=12V, V_{OUT}=3.3V, I_{OUT}=10mA→300mA, tr=tf=5μs, f_{OSC}=1.2MHz

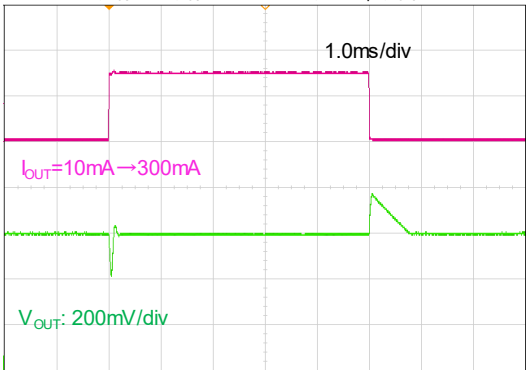

MYRGC075060W31RB

V_{IN}=12V, V_{OUT}=5.0V, I_{OUT}=10mA→300mA, tr=tf=5μs, f_{OSC}=1.2MHz

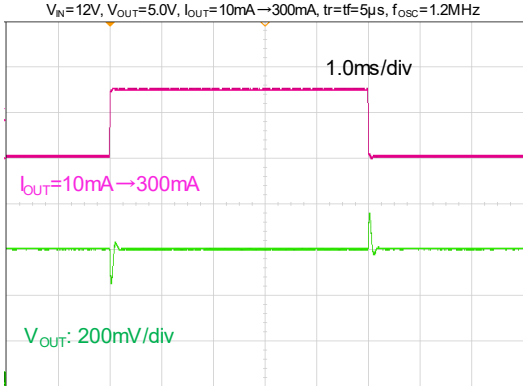

MYRGC075060B31RB

V_{IN}=12V, V_{OUT}=5.0V, I_{OUT}=10mA→300mA, tr=tf=5μs, f_{OSC}=1.2MHz

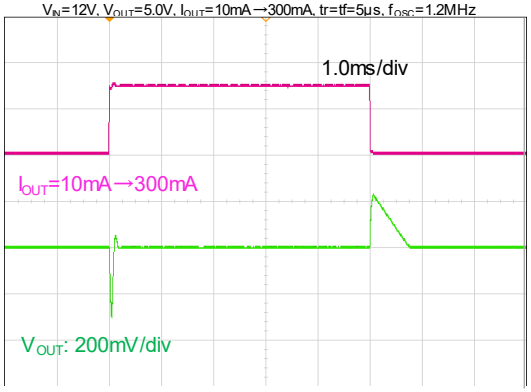

MYRGC075060W31RB

V_{IN}=24V, V_{OUT}=3.3V, I_{OUT}=10mA→300mA, tr=tf=5μs, f_{OSC}=1.2MHz

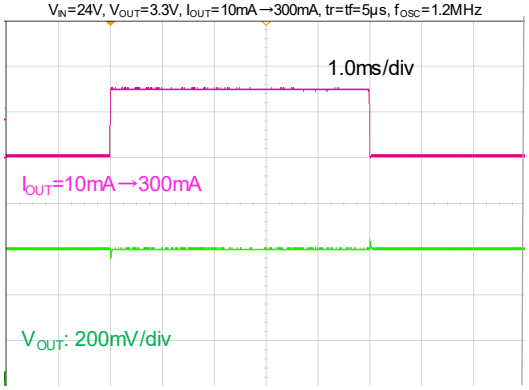

MYRGC075060B31RB

V_{IN}=24V, V_{OUT}=3.3V, I_{OUT}=10mA→300mA, tr=tf=5μs, f_{OSC}=1.2MHz

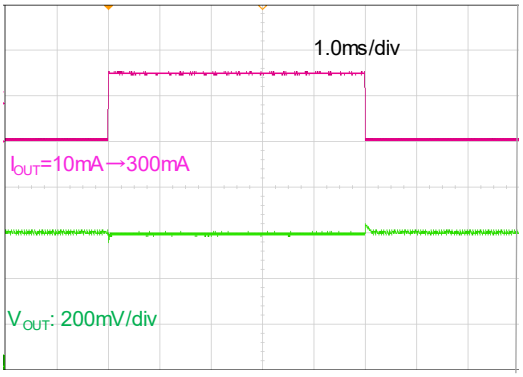

MYRGC075060W31RB

V_{IN}=24V, V_{OUT}=5.0V, I_{OUT}=10mA→300mA, tr=tf=5μs, f_{OSC}=1.2MHz

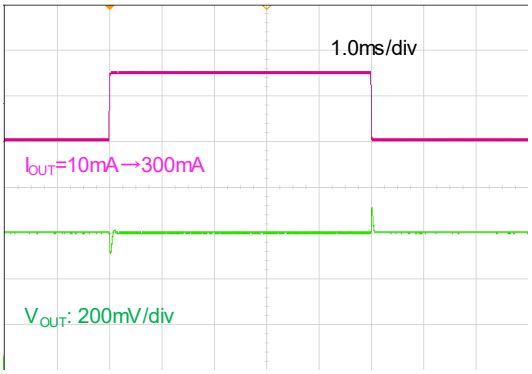

MYRGC075060B31RB

V_{IN}=24V, V_{OUT}=5.0V, I_{OUT}=10mA→300mA, tr=tf=5μs, f_{OSC}=1.2MHz

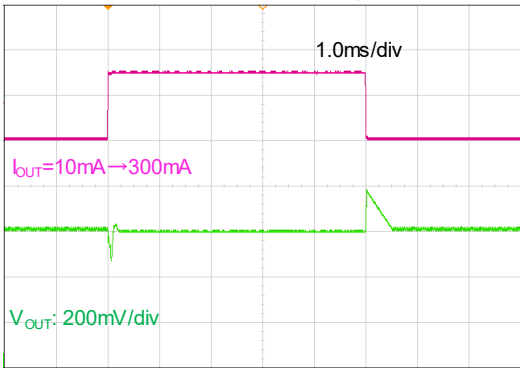

Copyright ©2026 Murata Manufacturing Co., Ltd. All rights reserved.
Specifications are subject to change without notice.

■TYPICAL PERFORMANCE CHARACTERISTICS

(18) Input Transient Response

MYRGC075060W31RB

V_{IN}=8V→16V, tr=tf=100µs, V_{OUT}=3.3V, I_{OUT}=300mA, f_{OSC}=1.2MHz

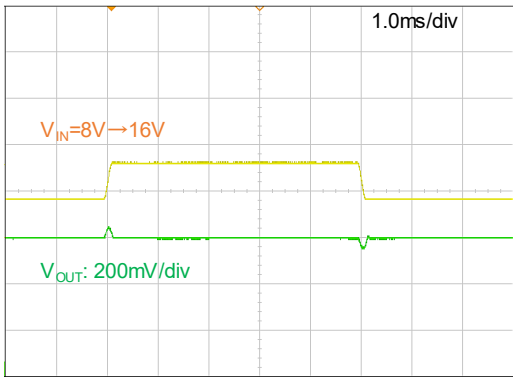

MYRGC075060B31RB

V_{IN}=8V→16V, tr=tf=100µs, V_{OUT}=3.3V, I_{OUT}=300mA, f_{OSC}=1.2MHz

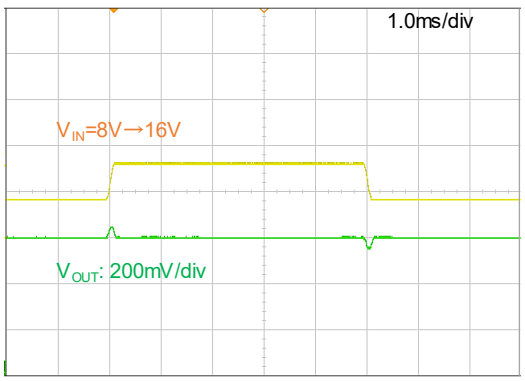

MYRGC075060W31RB

V_{IN}=8V→16V, tr=tf=100µs, V_{OUT}=5.0V, I_{OUT}=300mA, f_{OSC}=1.2MHz

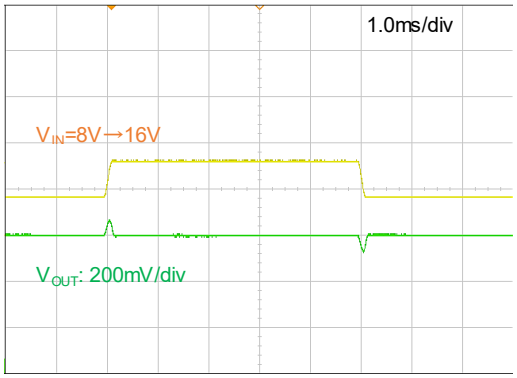

MYRGC075060B31RB

V_{IN}=8V→16V, tr=tf=100µs, V_{OUT}=5.0V, I_{OUT}=300mA, f_{OSC}=1.2MHz

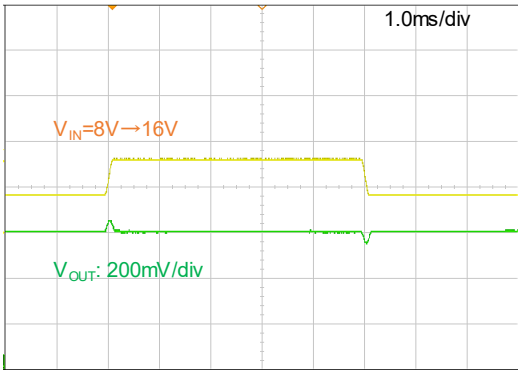

MYRGC075060W31RB

V_{IN}=16V→32V, tr=tf=100µs, V_{OUT}=5.0V, I_{OUT}=300mA, f_{OSC}=1.2MHz

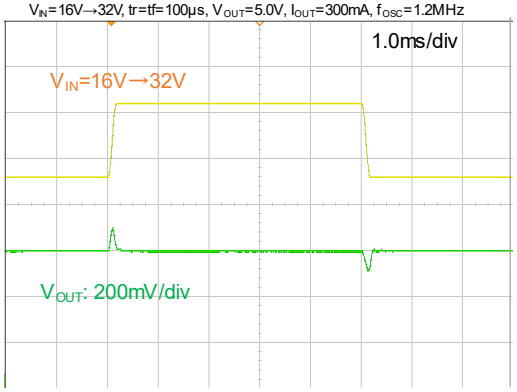

MYRGC075060B31RB

V_{IN}=16V→32V, tr=tf=100µs, V_{OUT}=5.0V, I_{OUT}=300mA, f_{OSC}=1.2MHz

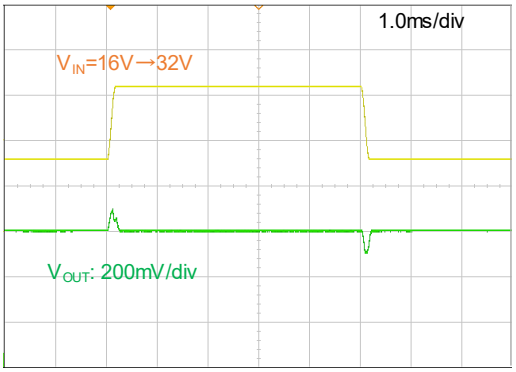

Copyright ©2026 Murata Manufacturing Co., Ltd. All rights reserved.
Specifications are subject to change without notice.

■TYPICAL PERFORMANCE CHARACTERISTICS

(19) Start-up Waveform (EN/SS Rising)

MYRGC075060W31RB / MYRGC075060B31RB

V_{IN}=12V, V_{ENSS}=0→12V, V_{OUT}=3.3V, R_L=11Ω

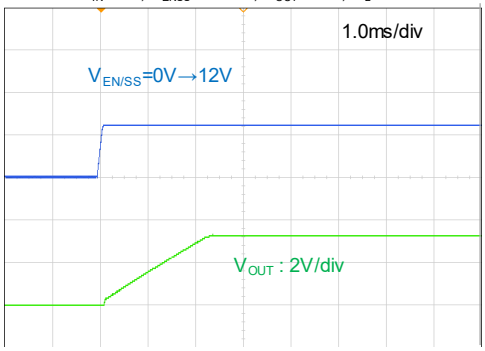

MYRGC075060W31RB / MYRGC075060B31RB

V_{IN}=12V, V_{ENSS}=0→12V, V_{OUT}=5.0V, R_L=16Ω

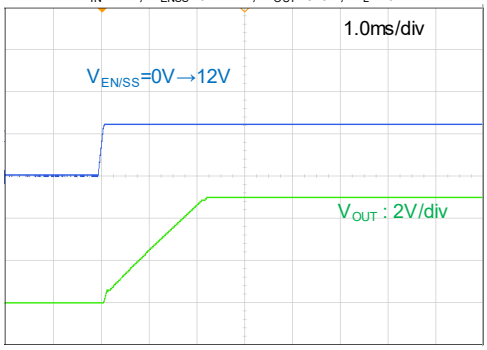

MYRGC075060W31RB / MYRGC075060B31RB

V_{IN}=24V, V_{ENSS}=0→24V, V_{OUT}=5.0V, R_L=16Ω

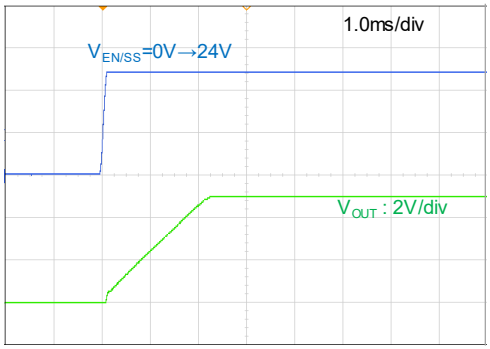

(20) Start-up Waveform (V_{IN} Rising)

MYRGC075060W31RB / MYRGC075060B31RB

V_{IN}=V_{ENSS}=0→12V, V_{OUT}=3.3V, R_L=11Ω

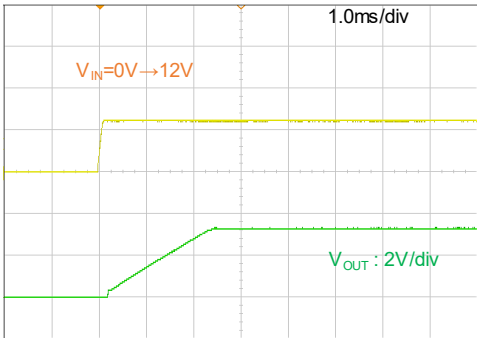

MYRGC075060W31RB / MYRGC075060B31RB

V_{IN}=V_{ENSS}=0→12V, V_{OUT}=5.0V, R_L=16Ω

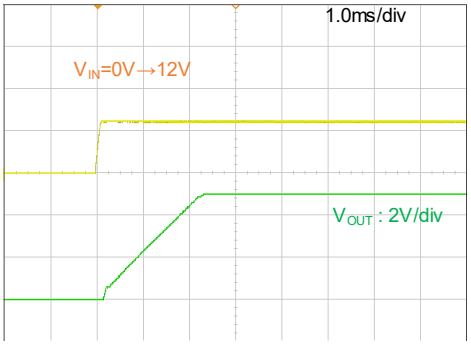

MYRGC075060W31RB / MYRGC075060B31RB

V_{IN}=V_{ENSS}=0→24V, V_{OUT}=5.0V, R_L=16Ω

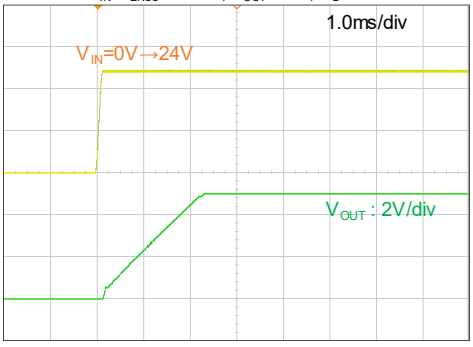

Copyright ©2026 Murata Manufacturing Co., Ltd. All rights reserved.
Specifications are subject to change without notice.

■PACKAGING INFORMATION

・Package (3.0mm×3.0mm, h=1.7mm)　3.0mm×3.0mm, h=1.7mm

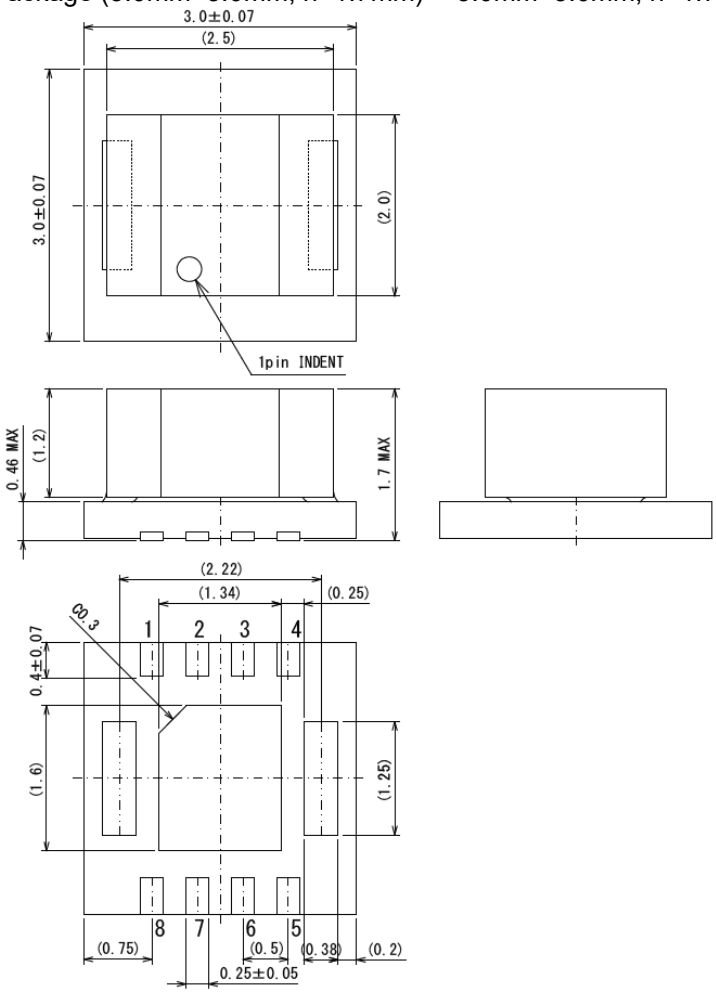

Unit: (mm)

・Reference Pattern Layout (Unit: mm)

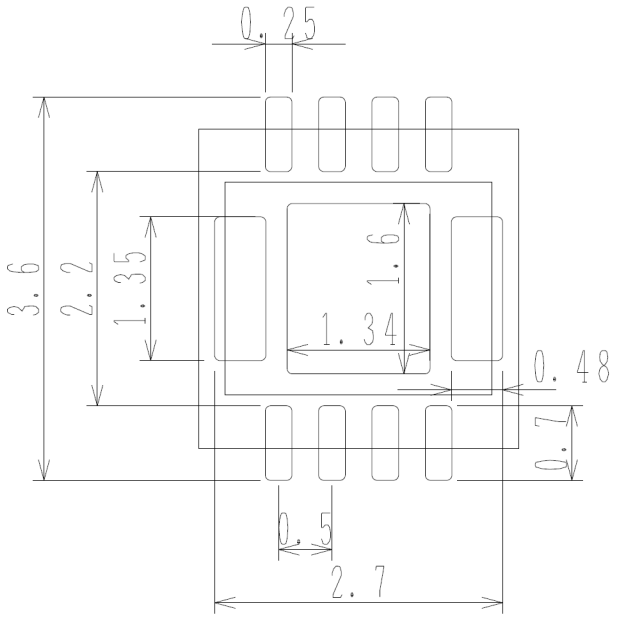

・Reference Metal Mask Design (Unit: mm)

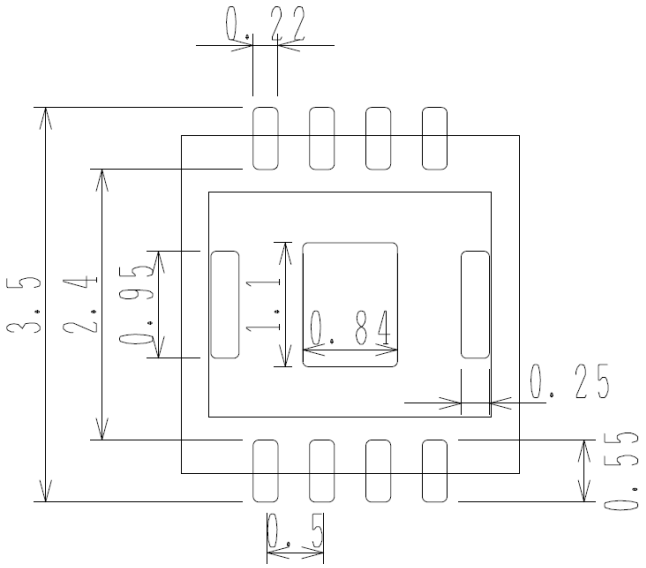

Solder thickness:120μm (Ref.)

Copyright ©2026 Murata Manufacturing Co., Ltd. All rights reserved.
Specifications are subject to change without notice.

■PACKAGING INFORMATION

Power Dissipation (JESD51-7)

Power dissipation data for the products is shown in this page.
The value of power dissipation varies with the mount board conditions.
Please use this data as one of reference data taken in the described condition.

1. Measurement Condition (Reference data)

Condition: Mount on a board
Ambient: Natural convection
Soldering: Lead (Pb) free
Board Dimensions: Copper foil 4 layer
dimensions 76.2mm x 114.3mm (about 8700mm^2 in one side)

1st inner layer: No copper foil
2nd inner layer: 70mm x 70mm connection with heat sink
3rd inner layer: 70mm x 70mm connection with heat sink
4th inner layer: No copper foil
Material: Glass Epoxy (FR-4)
Thickness: 1.6 mm
Through-hole: φ0.2mm x 60pc

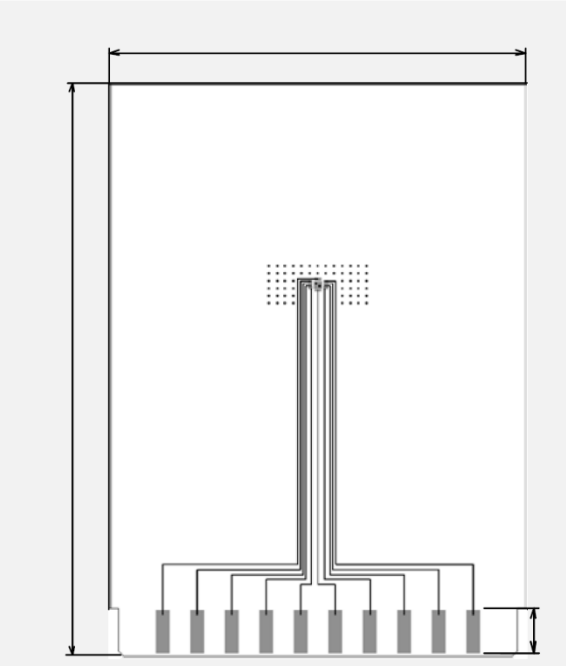

Evaluation Board (Unit: mm)

2. Power Dissipation vs. Ambient Temperature

Board Mount (Tjmax=125℃)

Ambient Temperature (℃)	Power Dissipation Pd (mW)	Θja (℃/W)
25	1950	51.28
105	390	

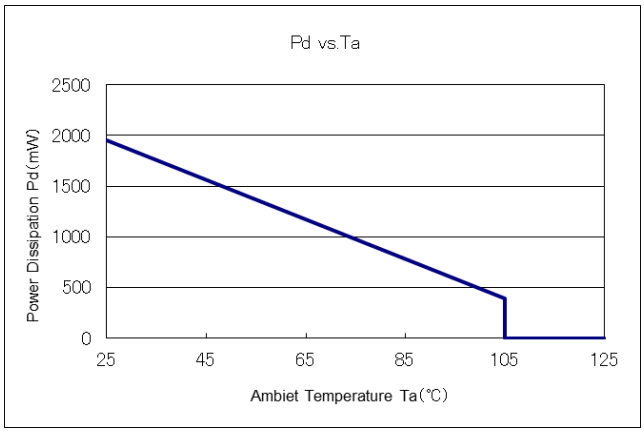

Copyright ©2026 Murata Manufacturing Co., Ltd. All rights reserved.
Specifications are subject to change without notice.

■MARKING RULE

①② represents products series

MARK		PRODUCT NAME
①	②	
T	P	MYRGC075060W31RB
T	R	MYRGC075060B31RB

③④ represents production lot number
01～09, 0A～0Z, 11～9Z, A1～A9, AA～AZ, B1～ZZ in order. (G, I, J, O, Q, W excluded)
* No character inversion used.

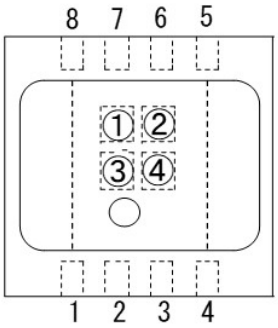

Copyright ©2026 Murata Manufacturing Co., Ltd. All rights reserved.
Specifications are subject to change without notice.

■REEL DIMENSION

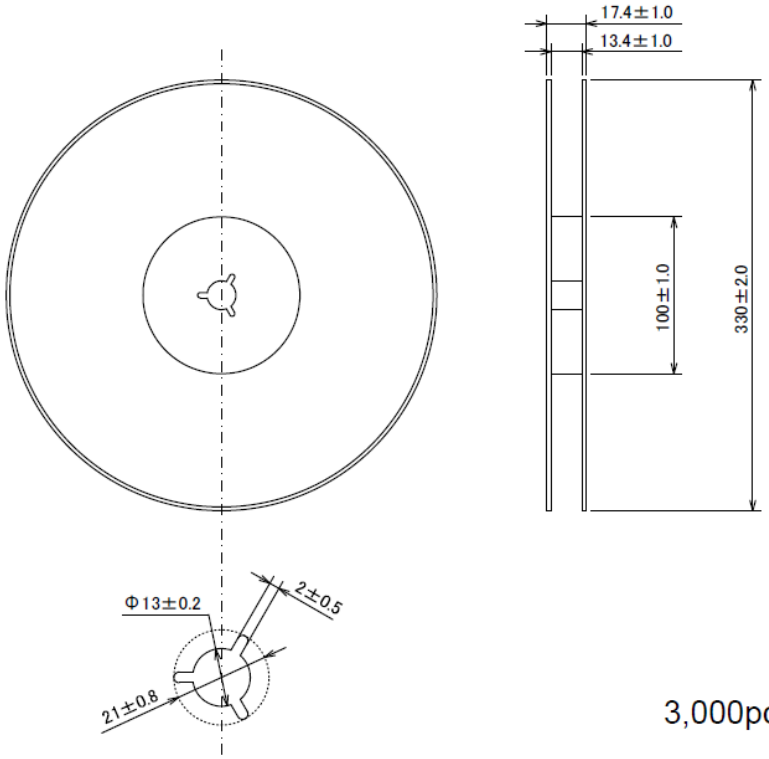

3,000pcs/Reel

■TAPING SPECIFICATIONS

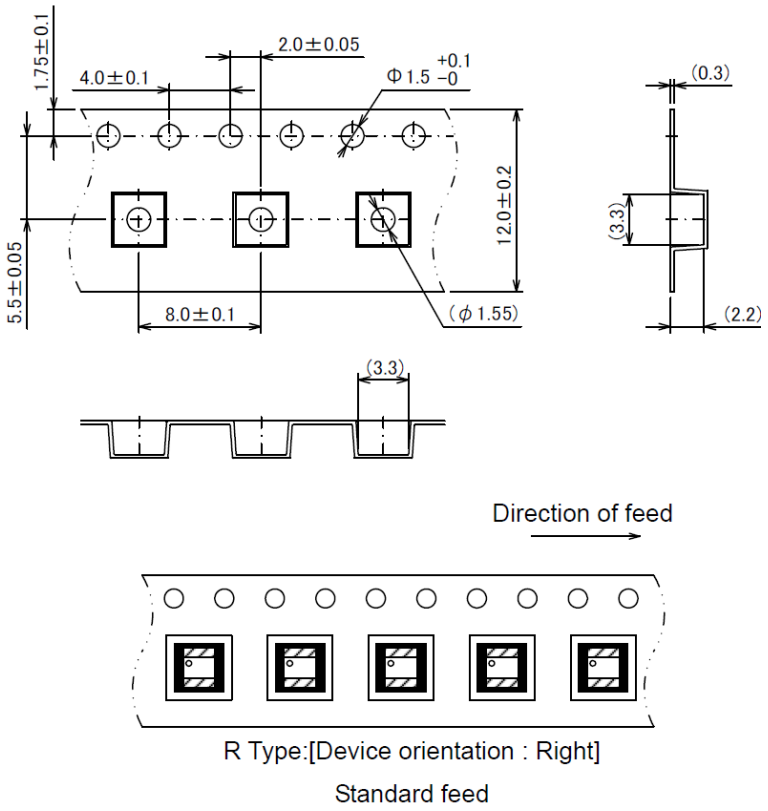

R Type:[Device orientation : Right]

Standard feed

Copyright ©2026 Murata Manufacturing Co., Ltd. All rights reserved.
Specifications are subject to change without notice.

■Revision History

VERSION	DATE	MODIFICATION	PAGE
A01	AUG-2025	New document	-
A02	APR-2026	Updated ELECTRICAL CHARACTERISTICS	p.6
A03	MAY-2026	Updated OPERATIONAL EXPLANATION – Thermal Shutdown Updated NOTES ON USE	p.16 p.20

Copyright ©2026 Murata Manufacturing Co., Ltd. All rights reserved.
Specifications are subject to change without notice.

1. The product and product specifications contained herein are subject to change without notice to improve performance characteristics. Consult us, or our representatives before use, to confirm that the information in this datasheet is up to date.

2. The information in this datasheet is intended to illustrate the operation and characteristics of our products. We neither make warranties or representations with respect to the accuracy or completeness of the information contained in this datasheet nor grant any license to any intellectual property rights of ours or any third party concerning with the information in this datasheet.

3. Applicable export control laws and regulations should be complied and the procedures required by such laws and regulations should also be followed when the product or any information contained in this datasheet is exported.

4. The product is neither intended nor warranted for use in equipment of systems which require extremely high levels of quality and/or reliability and/or a malfunction or failure which may cause loss of human life, bodily injury, serious property damage including but not limited to devices or equipment used in 1) nuclear facilities, 2) aerospace industry, 3) medical facilities, 4) automobile industry and other transportation industry and 5) safety devices and safety equipment to control combustions and explosions. Do not use the product for the above use unless agreed by us in writing in advance.

5. Although we make continuous efforts to improve the quality and reliability of our products; nevertheless Semiconductors are likely to fail with a certain probability. To prevent personal injury and/or property damage resulting from such failure, customers are required to incorporate adequate safety measures in their designs, such as system fail safes, redundancy and fire prevention features.

6. Our products are not designed to be Radiation-resistant.

7. Please use the product listed in this datasheet within the specified ranges.

8. We assume no responsibility for damage or loss due to abnormal use.

9. All rights reserved. No part of this datasheet may be copied or reproduced unless agreed by Murata Manufacturing Co.,Ltd. in writing in advance.

Murata Manufacturing Co.,Ltd.

Copyright ©2026 Murata Manufacturing Co., Ltd. All rights reserved.
Specifications are subject to change without notice.