Murata Power Solutions

2400 Series

Bobbin Wound Surface Mount Inductors

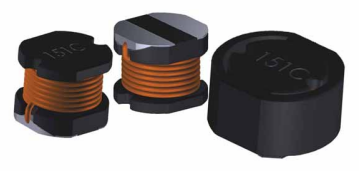

FEATURES

- RoHS compliant
- Up to 3.1A I_{DC}
- 2.7µH to 220µH
- Optional integral EMI shield
- Low R_{DC}
- Surface mount
- Compact size
- Tape and reel packaging
- J-STD-020C reflow
- Backward compatible with Sn/Pb soldering systems

DESCRIPTION

The 2400 series is a range of bobbin-wound, surface-mount inductors designed for use in switching power supply, and power line filter circuits. The parts are suitable for any application requiring a high saturation current in a miniature surface-mount footprint. Where EMI is a critical factor, the devices are available with an integral ferrite EMI shield.

SELECTION GUIDE (UNSHIELDED TYPES)

Order Code	Inductance (1kHz, 100mVAC) Nom. µH	Inductance Range (1kHz, 100mVAC) Min. - Max. µH	DC Current[1] Max. A	DC Resistance Max. mΩ	SRF Nom. MHz	Recommended Alternative
Discontinued						
242R7C	2.7	2.04 - 3.78	2.60	39	57.0	45332C
243R3C	3.3	2.44 - 4.54	2.40	42	53.0	45332C
244R7C	4.7	3.37 - 6.25	2.10	50	45.0	45472C
246R8C	6.8	5.03 - 9.34	1.75	61	37.0	45682C
24100C	10	8.00 - 12.0	1.44	100	27.8	45103C
24120C	12	8.54 - 15.9	1.36	100	26.0	45103C
24150C	15	12.0 - 18.0	1.30	120	22.0	45153C
24180C	18	13.0 - 24.1	1.26	150	20.0	45153C
24220C	22	17.6 - 26.4	1.11	180	16.5	45223C
24330C	33	28.1 - 34.7	0.88	230	13.1	45333C
24470C	47	40.8 - 54.1	0.72	370	10.9	45473C
24680C	68	61.2 - 74.8	0.61	460	9.38	45683C
24101C	100	90.0 - 110	0.52	700	7.03	45104C
24151C	150	135 - 165	0.40	1100	5.13	45154C
24221C	220	198 - 242	0.35	1570	4.24	45224C

SELECTION GUIDE (SHIELDED TYPES)

Order Code	Inductance (1kHz, 100mVAC) Nom. µH	Inductance Range (1kHz, 100mVAC) Min. - Max. µH	DC Current[1] Max. A	DC Resistance Max. mΩ	SRF Nom. MHz	Recommended Alternative
Discontinued						
24S2R7C	2.7	1.78 - 3.52	3.10	28	79.0	45332C
24S3R3C	3.3	2.07 - 4.68	2.80	32	63.0	45332C
24S4R7C	4.7	2.82 - 6.01	2.39	37	52.0	45472C
24S6R8C	6.8	4.40 - 9.17	2.00	45	39.0	45682C
24S100C	10	8.50 - 12.5	1.64	70	25.6	45103C
24S120C	12	7.65 - 15.2	1.50	74	29.0	45103C
24S150C	15	12.8 - 18.8	1.34	90	19.7	45153C
24S180C	18	11.1 - 22.7	1.22	91	23.0	45153C
24S220C	22	18.7 - 27.5	1.10	120	15.7	45223C
24S330C	33	28.1 - 41.3	0.90	190	11.2	45333C
24S470C	47	40.0 - 58.8	0.75	240	10.2	45473C
24S680C	68	57.8 - 85.0	0.63	370	8.09	45683C
24S101C	100	85.0 - 120	0.52	540	6.2	45104C
24S151C	150	128 - 180	0.42	860	4.88	45154C
24S221C	220	187 - 264	0.35	1310	3.58	45224C

ABSOLUTE MAXIMUM RATINGS

Operating free air temperature range	-40°C to 85°C
Storage temperature range	-40°C to 125°C

SOLDERING INFORMATION[2]

Peak reflow temperature	250°C
Pin finish	Hot dipped tin

RoHS COMPLIANT

For full details go to www.murata-ps.com/rohs

Specifications typical at T_A = 25°C

1 The maximum DC current is the value at which the inductance falls to 80% of its nominal value or when its temperature rise reaches 40°C, whichever is sooner.

2 For further information, please visit www.murata-ps.com/rohs

MECHANICAL DIMENSIONS

UNSHIELDED TYPES

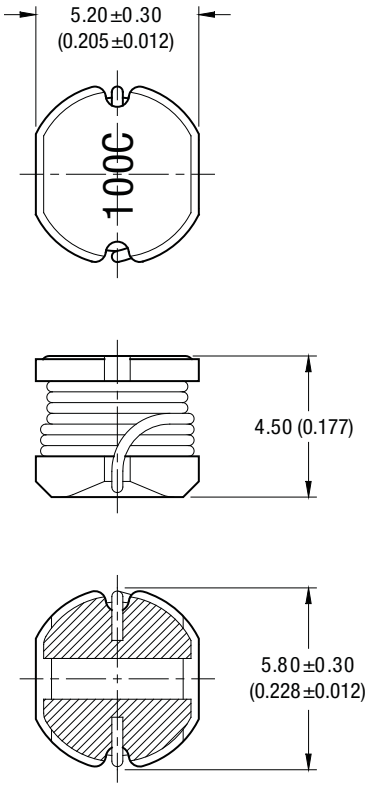

Unless otherwise stated all dimensions in mm (inches) ±0.25 (0.01). Package Weight 0.43g Typ.

RECOMMENDED FOOTPRINT

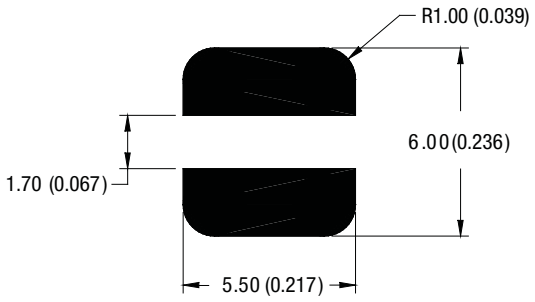

SHIELDED TYPES

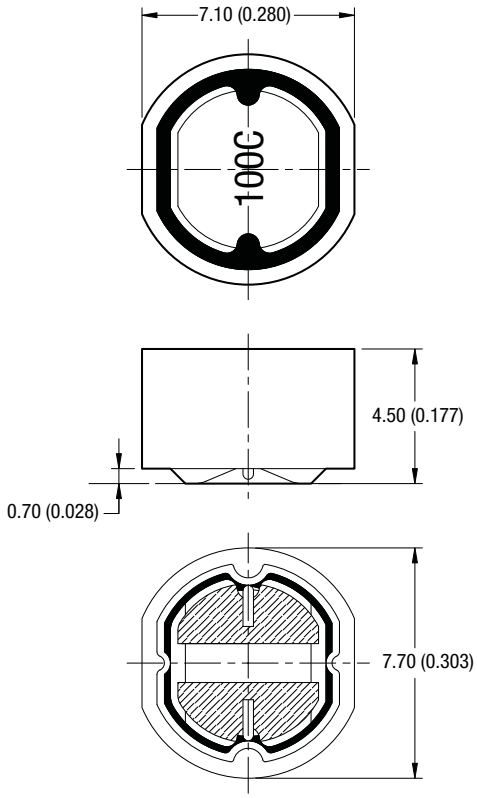

Unless otherwise stated all dimensions in mm (inches) ±0.25 (0.01). Package Weight 0.72g Typ.

RECOMMENDED FOOTPRINT

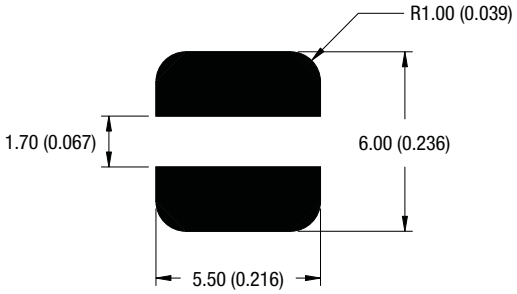

TAPE & REEL SPECIFICATIONS

TAPE OUTLINE DIMENSIONS - UNSHIELDED PARTS

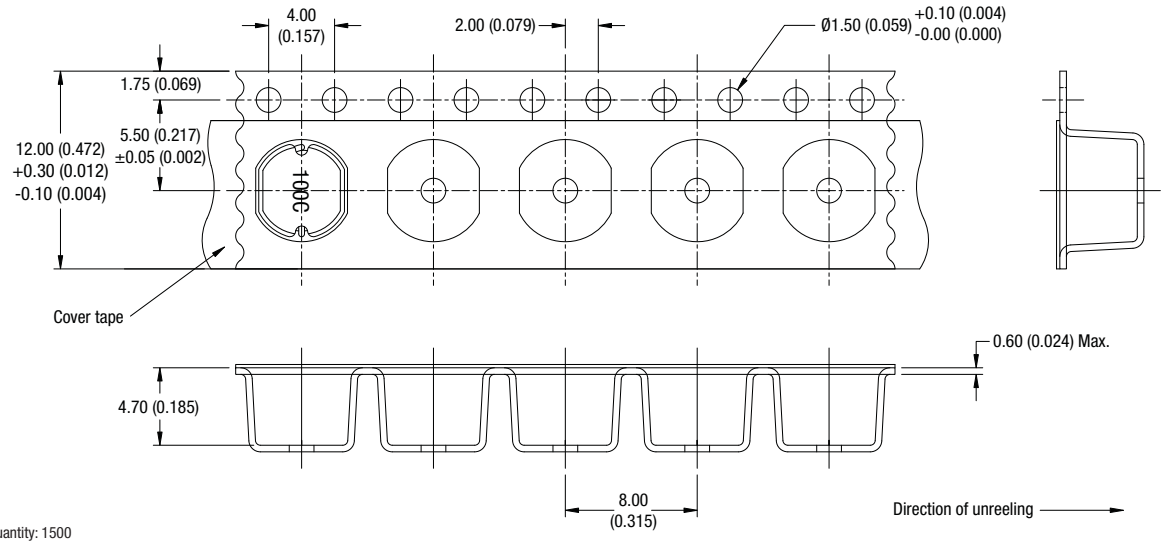

Reel quantity: 1500
All dimensions in mm (inches)

TAPE OUTLINE DIMENSIONS - SHIELDED PARTS

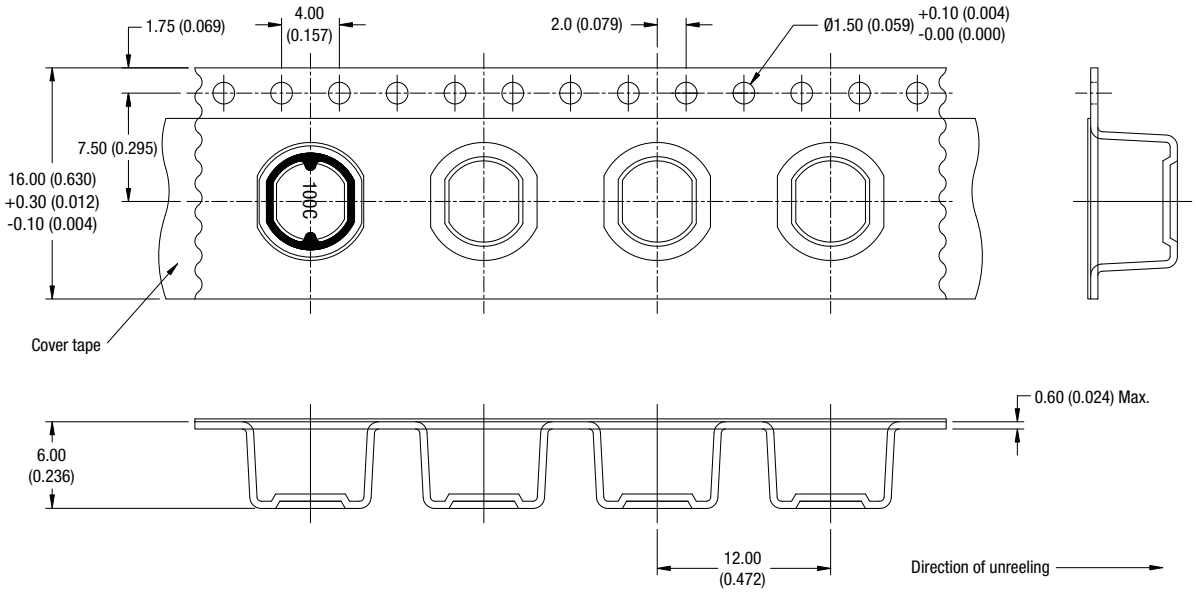

Reel quantity: 1000
All dimensions in mm (inches)

TAPE & REEL SPECIFICATIONS (Continued)

REEL OUTLINE DIMENSIONS

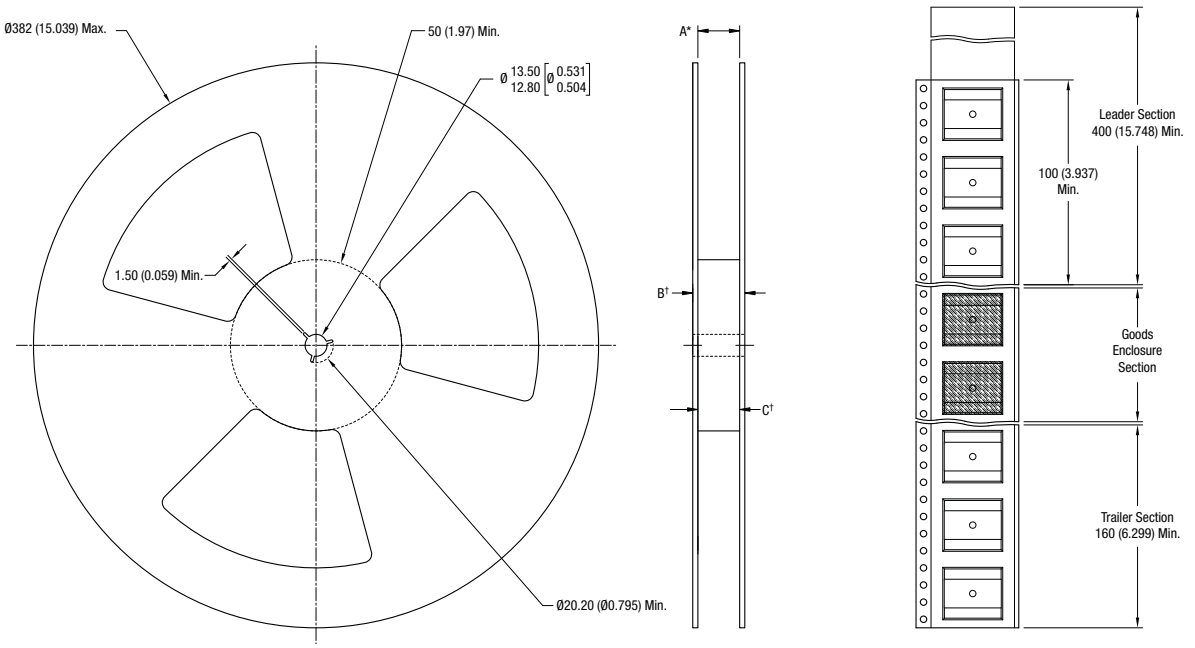

All dimension in mm [inches]
* Includes flange distortion at outer edge
† Measured at hub

	A	B (Max.)	C
Unshielded Types	11.9-15.4 (0.469-0.606)	18.4 (0.724)	12.4-12.6 (0.488-0.496)
Shielded Types	15.9-19.4 (0.626-0.764)	22.4 (0.882)	16.4-16.6 (0.646-0.654)

DISCLAIMER

Unless otherwise stated in the datasheet, all products are designed for standard commercial and industrial applications and NOT for safety-critical and/or life-critical applications.

Particularly for safety-critical and/or life-critical applications, i.e. applications that may directly endanger or cause the loss of life, inflict bodily harm and/or loss or severe damage to equipment/property, and severely harm the environment, a prior explicit written approval from Murata is strictly required. Any use of Murata standard products for any safety-critical, life-critical or any related applications without any prior explicit written approval from Murata shall be deemed unauthorised use.

These applications include but are not limited to:

- Aircraft equipment
- Aerospace equipment
- Undersea equipment
- Power plant control equipment
- Medical equipment
- Transportation equipment (automobiles, trains, ships, etc.)
- Traffic signal equipment
- Disaster prevention / crime prevention equipment
- Data Processing equipment

Murata makes no express or implied warranty, representation, or guarantee of suitability, fitness for any particular use/purpose and/or compatibility with any application or device of the buyer, nor does Murata assume any liability whatsoever arising out of unauthorised use of any Murata product for the application of the buyer. The suitability, fitness for any particular use/purpose and/or compatibility of Murata product with any application or device of the buyer remain to be the responsibility and liability of the buyer.

Buyer represents and agrees that it has all the necessary expertise to create and implement safeguards that anticipate dangerous consequences of failures, monitor failures and their consequences, lessen the likelihood of failures that might cause harm, and take appropriate remedial actions. Buyer will fully indemnify and hold Murata, its affiliated companies, and its representatives harmless against any damages arising out of unauthorised use of any Murata products in any safety-critical and/or life-critical applications.

Remark: Murata in this section refers to Murata Manufacturing Company and its affiliated companies worldwide including, but not limited to, Murata Power Solutions.

Murata Power Solutions (Milton Keynes) Ltd. makes no representation that the use of its products in the circuits described herein, or the use of other technical information contained herein, will not infringe upon existing or future patent rights. The descriptions contained herein do not imply the granting of licenses to make, use, or sell equipment constructed in accordance therewith. Specifications are subject to change without notice.
© 2026 Murata Power Solutions (Milton Keynes) Ltd.